Chapter 5 Mooring Facilities

1 General

Ministerial Ordinance

General Provisions

Article 25
Mooring facilities shall be installed in appropriate locations in light of geotechnical characteristics, meteorological characteristics, sea states, and other environmental conditions, as well as ship navigation and other usage conditions of the water area around the facilities concerned for the purpose of securing the safe and smooth usage by ships.

Ministerial Ordinance

Necessary Items concerning Mooring Facilities

Article 34
The items necessary for the performance requirements of mooring facilities as specified in this Chapter by the Minister of Land, Infrastructure, Transport and Tourism and other requirements shall be provided by the Public Notice.

Public Notice

Mooring Facilities

Article 47
The items to be specified by the Public Notice under Article 34 of the Ministerial Ordinance concerning the performance requirements of mooring facilities shall be as provided in the subsequent article through Article 73.

[Technical Note]

1.1 General

(1) Mooring facilities include quay walls, piers, lighter's wharfs, floating piers, docks, mooring buoys, mooring piles, dolphins, detached piers, air cushion craft landing facilities, etc. Among quaywalls, piers, and lighter's wharfs, facilities which are particularly important from the viewpoint of earthquake preparedness and require strengthening of seismic-resistant performance are termed high earthquake-resistance facilities, and are classified as high earthquake-resistance facilities (specially designated (emergency supply transport)), high earthquake-resistance facilities (specially designated (trunk line cargo transport)), and high earthquake-resistance facilities (standard (emergency supply transport)), corresponding to the functions required in the objective facilities after action of ground motion.

(2) Examples of the standard performance verification procedure for Level 1 earthquake ground motion and Level 2 earthquake ground motion of mooring facilities are shown in **Fig. 1.1.1** and **Fig. 1.1.2**, respectively. For details, the descriptions of the respective structural types may be referenced.

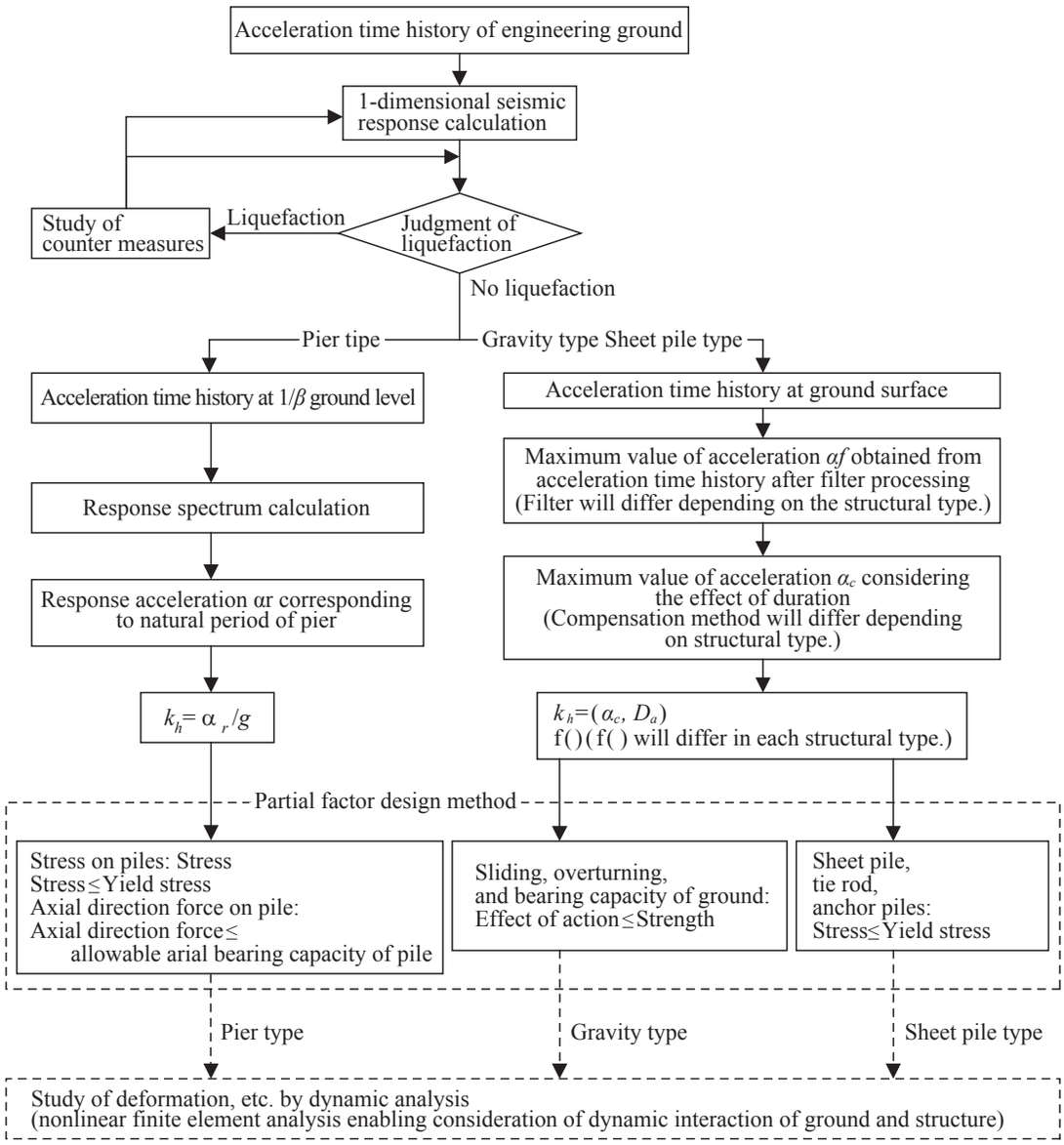

Fig. 1.1.1 Example of Performance Verification Procedure for Level 1 earthquake ground motion

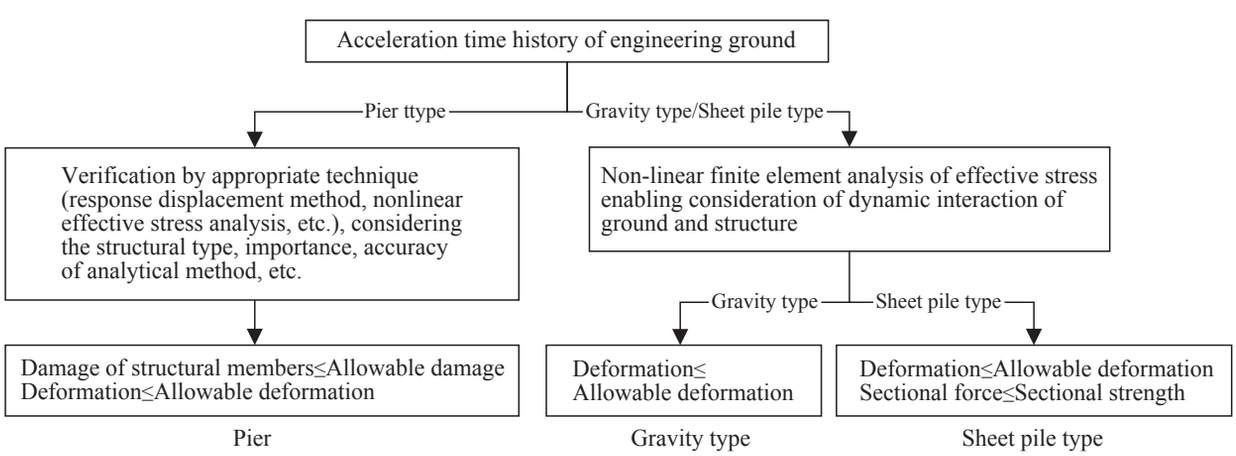

Fig. 1.1.2 Example of Performance Verification Procedure for Level 2 earthquake ground motion

1.2 Dimensions and Layout of Mooring Facilities

(1) The dimensions of mooring facilities are preferably determined based on an understanding of the actual circumstances, including the number and type of cargoes and passengers utilizing the port, the type of packing, marine and land transportation, and other relevant factors, with due consideration given to future trends in cargo and passenger volumes, increased size of vessels, changes in transportation systems, and the like.

(2) The layout of mooring facilities is preferably determined so that ship berthing and unberthing are easy, giving due consideration to sea conditions, topography, and subsoil conditions, and considering also the land transport network and land utilization in the hinterland. In particular, the locations of the following facilities should be selected as follows.

① Mooring facilities used by passenger ships should be isolated from the areas where hazardous cargoes are handled, and a sufficient area of land should be secured in the vicinity of the facilities for waiting rooms and parking lots.

② Mooring facilities used by vessels loaded with hazardous cargoes should be located in accordance with the following conditions:

a) Mooring facilities are isolated from such facilities as housing, schools, and hospitals.
b) The required safety distance from other mooring facilities and sailing vessels is secured.
c) Countermeasures against spills of hazardous materials are easily mobilized.

③ Mooring facilities where a considerable amount of noise may be generated by vessels or cargo handling equipment should be isolated from such facilities as housing, schools, and hospitals to preserve a good environment for daily living.

④ Mooring facilities where conspicuous dust and offensive odors may be generated during cargo handling work should be isolated from such facilities as housing, schools, and hospitals to preserve a good environment for daily living.

⑤ Offshore mooring facilities should not hinder the navigation or anchorage of vessels.

⑥ Whenever possible, high earthquake-resistance facilities and large-scale mooring facilities are preferably arranged in areas with good ground conditions, as large investment may be required for ground improvement, etc., depending on the ground conditions.

⑦ Regarding facilities which may have a large effect on life, property, and social and economic activities.
If those facilities are damaged and high earthquake-resistance facilities, in cases where such facilities are located near the hypocenter of an inland active fault, the objective facilities are preferably constructed in such a way that the face line is orthogonal to the direction of the seismogenic fault. This is recommended because particularly strong ground motion may occur in the direction orthogonal to the inland active fault near the fault hypocenter, and an arrangement in which the face line of the facilities is orthogonal to the seismogenic fault is structurally advantageous against actions due to ground movement generated by such active faults.

1.3 Selection of Structural Type of Mooring Facilities

The selection of the structural type for mooring facilities is preferably determined based on a comparative study of the following items, considering the characteristics of each structural type.

① Natural condition
② Usage condition
③ Construction condition
④ Economic condition

1.4 Standard Concept of Allowable Deformation of High Earthquake-resistance Facilities for Level 2 Earthquake Ground Motion

(1) The standard limit for deformation in accidental situations for Level 2 earthquake ground motion may be set as follows, depending on the performance requirements of the facilities. Provided, however, that this shall not apply to cases in which deformation is set based on a total judgment, considering site conditions, performance requirements, structural type, etc. of the objective facilities.

(a) High earthquake-resistance facilities (specially designated (emergency supply transport))
From the viewpoint of function, the allowable residual deformation of high earthquake-resistance facilities (specially designated (emergency supply transport)) can be set, as a standard, at approximately 30-100cm, and

the allowable residual inclination angle can be set at approximately 3°. For example, because materials, etc. for emergency restoration are stockpiled at all times and a system for emergency restoration is prepared, in cases where it is judged that serviceability can be secured even in the event of large deformation, allowable deformation can be set at approximately 100cm.

(b) High earthquake-resistance facilities (specially designated (trunk line cargo transport))
The allowable residual deformation for high earthquake-resistance facilities (specially designated (trunk line cargo transport)) is set based on the period until the expected functions can be restored. From the viewpoint of maintaining the trunk line cargo transport function, it is more rational to set a shorter period for earthquakes in which a wide area suffers damage, as in ocean trench type earthquakes, than that for earthquakes in which damage is concentrated in a comparatively narrow area, as in an inland active fault earthquakes. In this case, a smaller allowable deformation can be set for an ocean trench type earthquake than for an inland active fault earthquake.

In high earthquake-resistance facilities (specially designated (trunk line cargo transport)), in order to secure the same level of earthquake resistance in cranes as that of the mooring facilities, cranes with a seismic isolation/damping mechanism are installed. In this case, a seismic response analysis which considers the dynamic interaction of the mooring facilities and cranes is performed, and the response of the structural members of the cranes is set within the elastic limit. The limit of the relative deformation of the rail span shall be set depending on the characteristics of the cargo handling equipment mounted on the rails. For example, if the elastic deformation range of the crane legs is 70cm and the limit (displacement stroke) of the seismic isolation mechanism is 30cm, the limit of the relative deformation of the rail span may be set at 100cm.

(c) High earthquake-resistance facilities (standard (emergency supply transport))
The allowable residual deformation for high earthquake-resistance facilities (standard (emergency supply transport)) must be set with consideration given to enabling cargo handling after a certain period following the action of Level 2 earthquake ground motion. An appropriate value roughly on the order of 100cm or more can be set for residual horizontal deformation.

References

1) Takahashi, H., T. Nakamoto and F. Yoshimura: Analysis of maritime transportation in Kobe Port after the 1995 Hyogoken-Nanbu Earthquake, Technical Note of PHRI No.861,1997
2) Kazui, K., H. Takahashi, T. Nakamoto and Y. Akakura: Evaluation of allowable damage deformation of gravity type quay wall during earthquake, Proceedings of 10th Symposium on Earthquake Engineering, K-4,1998

2 Wharves

Ministerial Ordinance

Performance Requirements for Quaywalls

Article 26

1 The performance requirements for quaywalls shall be as specified in the subsequent items in consideration of its structural type:

(1) The performance requirements shall be such that the requirements specified by the Minister of Land, Infrastructure, Transport and Tourism are satisfied so as to enable the safe and smooth mooring of ships, embarkation and disembarkation of people, and handling of cargo.

(2) Damage to the quaywall due to self weight, earth pressure, Level 1 earthquake ground motions, berthing and traction by ships, imposed load or other actions shall not impair the functions of the quaywall concerned and not adversely affect its continued use.

2 In addition to the provisions of the previous paragraph, the performance requirements for quaywalls which are classified as high earthquake-resistance facilities shall be such that the damage due to the action of Level 2 earthquake ground motions and other actions do not affect the restoration through minor repair works of the functions required for the quaywall concerned in the aftermath of the occurrence of Level 2 earthquake ground motions. Provided, however, that for the performance requirements for the quaywall which requires further improvement in earthquake-resistant performance due to environmental conditions, social conditions or other conditions to which the quaywall concerned is subjected, the damage due to said actions shall not affect the restoration through minor repair works of the functions of the quaywall concerned and its continued use.

[Commentary]

(1) Wharves classified as high earthquake-resistance facilities (restorability, serviceability)
The following classifications are used as standards in provisions stipulating the appropriate performance of high earthquake-resistance facilities, corresponding to the functions necessary after action of Level 2 earthquake ground motion and the allowable period for restoration in order to demonstrate those functions.

① Specially designated (emergency supply transport): Facilities which can be used by ships and perform embarkation/disembarkation of persons and cargo handling of emergency supplies, etc. immediately after action of Level 2 earthquake ground motion.

② Specially designated (trunk line cargo transport): Facilities which can be used by ships and perform cargo handling of trunk line cargoes within a short period after action of Level 2 earthquake ground motion.

③ Standard (emergency supply transport): Facilities which can be used by ships and perform embarkation/disembarkation of persons and cargo handling of emergency supplies, etc. within a certain period after action of Level 2 earthquake ground motion.

[Technical Note]

(1) Wharves Classified as High Earthquake-resistance Facilities

① In wharves which are classified as high earthquake-resistance facilities, it is necessary to secure restorability for accidental situations associated with Level 2 earthquake ground motion. In the case of wharves in which further improvement in earthquake resistance is necessary, depending on the natural conditions and social conditions where the wharf is installed, it is necessary to secure serviceability for the same Design situation. Provided, however, that restorability and serviceability, as used here, refer to the performance requirements of the functions considered necessary in the quaywall after action of Level 2 earthquake ground motion, and are independent of the essential functions considered necessary in the objective wharf under normal conditions.

② Classification of high earthquake-resistance facilities
High earthquake-resistance facilities are classified as high earthquake-resistance facilities (specially designated (emergency supply transport)), high earthquake-resistance facilities (specially designated (trunk line cargo transport)), and high earthquake-resistance facilities (standard (emergency supply transport)), corresponding to

the functions required in the objective facilities after action of Level 2 earthquake ground motion, and settings in connection with the performance criteria and design situation are given corresponding to these classifications. For details of the classification of high earthquake-resistance facilities, see **Table 2.1**.

Table 2.1 Classification of Earthquake-Resistance Facilities

	Class of earthquake-resistance facility		
	Specially designated		Standard
	Emergency supply transport	Trunk line cargo transport	Emergency supply transport
Functions required after action of Level 2 earthquake ground motion	Must retain structural stability after earthquake and enable immediate use by ships, boarding/deboarding of persons, and cargo handling of emergency supplies, etc.	Must retain structural stability after earthquake and enable quick use (after short time) by ships and cargo handling of trunk line cargoes.	Must retain structural stability after earthquake and enable cargo handling of emergency supplies, etc. after a certain period.
	Functions necessary after earthquake (essential functions are not necessary).	Essential functions.	Functions necessary after earthquake (essential functions are not necessary).
Performance requirement	Serviceability*)	Restorability	Restorability *)
Allowable restoration	Slight restoration	Slight restoration	Certain degree of restoration

*): This performance requirement corresponds to functions (emergency supply transport) which are necessary after an earthquake, and is different from the performance requirement of the essential functions of the facilities.

(2) Emergency Supply Transport Type High Earthquake-resistance Facilities

① Specially designated (emergency supply transport)
In high earthquake-resistance facilities (specially designated (emergency supply transport)), it is necessary to secure serviceability with respect to accidental situations associated with Level 2 earthquake ground motion. Here, this serviceability does not necessarily mean that the facilities concerned will be completely undamaged after action of Level 2 earthquake ground motion; rather, it means that the damage must be limited to a degree at which the facilities will be utilized for the transport of emergency supplies.

② Standard (emergency supply transport)
In high earthquake-resistance facilities (standard (emergency supply transport)), it is necessary to secure restorability with respect to accidental situations associated with Level 2 earthquake ground motion. Here, this restorability means that it is necessary to limit damage to a degree where restration is possible, so that emergency supplies can be transported, after a certain period by emergency restration, even in cases in which facilities are damaged by action of Level 2 earthquake ground motion. "Certain period," as used here, means a period on the order of approximately 1 week after the action of Level 2 earthquake ground motion.

(3) Trunk Line Cargo Transport Type High Earthquake-resistance Facilities
In high earthquake-resistance facilities (specially designated (trunk line cargo transport)), it is necessary to secure restorability with respect to accidental situations associated with Level 2 earthquake ground motion. Here, restorability means that it is necessary to limit damage to a degree where transport of trunk line cargoes can be performed after a short period by slight restoration, for example, within the allowable deformation set in line with the characteristics of the cargo handling equipment, even in case of damage by action of Level 2 earthquake ground motion. "Short period," as used here, will differ depending on the functions necessary in the facilities concerned, and therefore should be set appropriately corresponding to the respective facilities.

2.1 Common Items for Wharves

Public Notice

Performance Criteria of Quaywalls

Article 48

1 The performance criteria which are common for quaywalls shall be as specified in the subsequent items:

(1) Quaywalls shall have the water depth and length necessary for accommodating the design ships in consideration of their dimensions.

(2) Quaywalls shall have the crown height as necessary in consideration of the range of tidal levels, the dimensions of the design ship, and the utilization conditions of the facilities concerned.

(3) Quaywalls shall have the ancillary equipment as necessary in consideration of the utilization conditions.

2 In addition to the provisions in the preceding paragraph, the performance criteria of quaywalls which are classified as the high earthquake-resistance facilities shall be such that the degree of damage owing to the actions of Level 2 earthquake ground motions, which are the dominant action in the accidental action situation, is equal to or less than the threshold level corresponding to the performance requirements

[Commentary]

(1) Performance Criteria for Wharves

① Quaywalls classified as high earthquake-resistance facilities

(a) In settings in connection with the common performance criteria and design situation (limited to accidental situation) for wharves classified as high earthquake-resistance facilities, the following can be used, corresponding to the Design situation. The performance requirements of restorability and serviceability in **Attached Table 25** will differ depending on the classification of the high earthquake-resistance facilities. Furthermore, "Damage" has been adopted as the verification item in **Attached Table 25** from the viewpoint of comprehensiveness, considering the fact that verification items will differ depending on the structural type. Regarding the performance criteria in connection with accidental situations common to quaywalls which are classified as high earthquake-resistance facilities, it may also be noted that settings in connection with Technical Standard public notice Article 22 (Common Performance Criteria of Component Members of Target Facilities Subject to the Technical Standard) may also be applied, when necessary, in addition to this code.

Attached Table 25 Settings in Connection with Common Performance Criteria and Design Situation of Wharves Classified as High Earthquake-resistance Facilities (Limited to Accidental Situations)

Ministerial Ordinance			Public Notice			Performance requirements	Design situation			Verification item	Index of standard limit value
Article	Paragraph	Item	Article	Paragraph	Item		Situation	Dominating actions	Non-dominating actions		
26	2	-	48	2	-	Restorability, Serviceability	Accidental	L2 earthquake ground motion	Self weight, water pressure, surcharge	Damage	-

*) In this table, "serviceability" means serviceability with respect to "necessary function after earthquake (emergency supply transport)."
*) In this table, "restorability" means restorability with respect to "essential function" or "necessary function after earthquake (emergency supply transport)."

(b) Gravity-type quaywalls (high earthquake-resistance facilities)

1) Among the settings in connection with the performance criteria and design situation (limited to accidental situations) of quaywalls which are classified as high earthquake-resistance facilities, those concerning gravity-type quaywalls are as shown in **Attached Table 26**.

Attached Table 26 Settings in Connection with Performance Criteria and Design Situation of Gravity-type Quaywalls Classified as High Earthquake-resistance Facilities (Limited to Accidental Situations)

Ministerial Ordinance			Public Notice			Performance requirements	Design situation			Verification item	Index of standard limit value
Article	Paragraph	Item	Article	Paragraph	Item		Situation	Dominating actions	Non-dominating actions		
26	2	-	48	2	-	Restorability, Serviceability	Accidental	L2 earthquake ground motion	Self weight, earth pressure, water pressure, surcharge	Deformation of face line of quay wall	Limit of residual deformation

**) In this table, "serviceability" means serviceability with respect to "necessary function after earthquake (emergency supply transport)."
*) In this table, "restorability" means restorability with respect to "essential function" or "necessary function after earthquake (emergency supply transport)."

2) High earthquake-resistance facilities (specially designated (emergency supply transport)) (serviceability)
The limit of deformation of gravity-type quaywalls which are classified as high earthquake-resistance facilities (specially designated (emergency supply transport)) shall be deformation of a degree such that berthing of ships for marine transport of emergency supplies, evacuees, construction machinery for removing obstructions, etc. is possible, and shall be set appropriately. As the index of deformation, in general, the residual horizontal displacement of the quaywall can be used.

3) High earthquake-resistance facilities (specially designated (trunk line supply transport) (restorability)
The limit of deformation of gravity-type quaywalls which are classified as high earthquake-resistance facilities (specially designated (trunk line cargo transport)) shall be deformation of a degree such that trunk line cargo transport can be performed after slight restoration, within the permissible displacement set in line with the characteristics of the cargo handling equipment, or similar, and shall be set appropriately. As indexes of deformation, in general, the residual horizontal displacement of the quaywall, residual inclination angle of the wall, and relative displacement of the rail span can be used. In the case of quaywalls using cargo handling equipment for trunk line cargo transport, appropriate consideration shall be given to the form, type, and characteristics of the cargo handling equipment when setting limit values.

4) High earthquake-resistance facilities (standard (emergency supply transport)
The limit of deformation of gravity-type quaywalls which are classified as high earthquake-resistance facilities (standard (emergency supply transport)) shall be deformation of a degree such that cargo handling of emergency supplies can be performed after emergency restoration within a given period of time, and shall be set appropriately. As the index of deformation, in general, the residual horizontal displacement of the quaywall can be used.

(c) Sheet pile quaywalls (high earthquake-resistance facilities)

1) In the commentary on the performance criteria and design situation (limited to accidental situations) for quaywalls classified as high earthquake-resistance facilities, the items in connection with sheet pile quaywalls are as follows, corresponding to the type of high earthquake-resistance facilities.

2) High earthquake-resistance facilities (specially designated (emergency supply transport) (serviceability)

i) Settings in connection with the performance criteria and design situation (limited to accidental situations) of sheet pile quaywalls classified as high earthquake-resistance facilities (specially designated (emergency supply transport) are as shown in **Attached Table 27**.

Attached Table 27 Settings in Connection with Performance Criteria and Design situation (limited to Accidental Situations) of Sheet Pile Quaywall type High Earthquake-resistance Facilities (Specially Designated (Emergency Supply Transport), Specially Designated (Trunk Line Cargo Transport)

Ministerial Ordinance			Public Notice			Performance requirements	Design situation			Verification item	Index of standard limit value
Article	Paragraph	Item	Article	Paragraph	Item		Situation	Dominating actions	Non-dominating actions		
26	2	-	48	2	-	Restorability, Serviceability	Accidental	L2 earthquake ground motion	Self weight, earth pressure, water pressure, surcharge	Deformation of face line of quay wall	Limit of residual deformation
										Yielding of sheet piles	Design yield stress
										Rupture of tie members	Design rupture strength
										Fully plastic state of anchorage work*1)	Design section strength (fully plastic state moment)
										Axial force acting on anchorage work*2)	Resistance based on ground failure (pushing, pulling)
										Stability of anchorage work*3)	Design ultimate capacity of section (ultimate limit state)
										Cross sectional failure of superstructure	Design ultimate capacity of section (ultimate limit state)

*1): The structural type of anchorage work is limited to the cases of vertical pile anchorage, coupled-pile anchorage, and sheet pile anchorage.
*2) The structural type of anchorage work is limited to the case of coupled-pile anchorage.
*3) The structural type of anchorage work is limited to the case of concrete wall anchorage.
*) In this table, "serviceability" means serviceability with respect to "necessary function after earthquake (emergency supply transport)," and indicates the required capacity for specially designated (emergency supply transport).
*) In this table, "restorability" means restorability with respect to "essential function," and indicates the required capacity for specially designated (trunk line cargo transport).

ii) Deformation of face line of quaywall
The limit of deformation shall be equivalent to the limit for gravity-type quaywalls.

iii) Yielding of sheet pile
Verification of yielding of sheet piles shall mean verification that the risk of stress generated in the sheet pile exceeding the yield stress is less than the limit value.

iv) Rupture of tie member
Verification of rupture of tie rods shall mean verification that the risk of stress generated in the tie members exceeding the design rupture strength is less than the limit value.

v) Fully plastic state of anchorage work (case of sheet pile anchorage)
Structural types of anchorage work are broadly classified as vertical pile anchorage, coupled-pile anchorage, sheet pile anchorage, and concrete wall anchorage. In performance verification of anchorage work, appropriate verification items shall be set corresponding to the structural type. It should be noted that, in **Attached Table 27**, verification items are presented for anchorage work by vertical pile anchorage and coupled-pile anchorage; verification of a fully plastic state of anchorage work means verification that the flexural moment generated in the members of the anchorage work has not achieved a fully plastic state moment.

vi) Axial force acting on anchorage work (batter-type coupled-pile anchorage)
As mentioned in v), **Attached Table 27** presents verification items for anchorage work for vertical pile anchorages and coupled pile anchorages; verification of the axial force acting on the anchorage means verification that the risk of the axial force acting on the anchorage piles exceeding resistance based on failure of the ground is less than the limit value. Here axial force is either pushing force or pulling force and the resistance based on the failure of the ground include pushing or pulling resistance of the anchorage.

vii) Cross sectional failure of superstructure
Verification of cross sectional failure of the superstructure means verification that the risk of the sectional force generated in the superstructure exceeding the design ultimate strength is less than the limit value.

3) High earthquake-resistance facilities (specially designated (trunk line cargo transport) (restorability)
The performance criteria of sheet pile quaywalls classified as high earthquake-resistance facilities (specially designated (trunk line cargo transport) shall be equivalent to the performance criteria of sheet pile quaywalls classified as high earthquake-resistance facilities (specially designated (emergency supply transport)

4) High earthquake-resistance facilities (standard (emergency supply transport) (restorability)

i) Settings in connection with the performance criteria and design situation (limited to accidental situations) of sheet pile quaywalls classified as high earthquake-resistance facilities (standard (emergency supply transport) shall be as shown in Attached Table 28. Regarding the commentary on the performance criteria and design situation of sheet pile quaywalls classified as high earthquake-resistance facilities (standard (emergency supply transport)), with the exception of the verification items in connection with sheet pile, the commentary shall be equivalent to that for the performance criteria and design situation of sheet pile quaywalls classified as high earthquake-resistance facilities (specially designated (emergency supply transport)).

Attached Table 28 Settings in connection with Performance Criteria and Design Situation (limited to Accidental Situations) of Sheet Pile Quaywalls Classified as High Earthquake-resistance Facilities (Standard (Emergency Supply Transport))

Ministerial Ordinance			Public Notice			Performance requirements	Design situation			Verification item	Index of standard limit value
Article	Paragraph	Item	Article	Paragraph	Item		Situation	Dominating actions	Non-dominating actions		
26	2	-	48	2	-	Restorability	Accidental	L2 earthquake ground motion	Self weight, earth pressure, water pressure, surcharge	Deformation of face line of quay wall	Limit of residual deformation
										Fully plastic state of sheet pile	Fully plastic state moment
										Rupture of tie member	Design rupture strength
										Fully plastic state of anchorage work*1)	Design section strength (fully plastic state moment)
										Axial force acting on anchorage work*2)	Resistance based on ground failure (pushing, pulling)
										Stability of anchorage work*3)	Design ultimate capacity of section (ultimate limit state)
										Cross sectional failure of superstructure	Design ultimate capacity of section (ultimate limit state)

*1): The structural type of anchorage work is limited to the cases of vertical pile anchorage, coupled-pile anchorage, and sheet pile anchorage.
*2) The structural type of anchorage work is limited to the case of coupled-pile anchorage.
*3) The structural type of anchorage work is limited to the case of concrete wall anchorage.
*) In this table, "Restorability" means restorability with respect to "necessary function after earthquake (emergency supply transport.)"

d) Cantilevered sheet pile quaywalls (high earthquake-resistance facilities)
Among the settings in connection with the performance criteria and design situation (limited to accidental situations) of quaywalls classified as high earthquake-resistance facilities, those applicable to cantilevered sheet pile quaywalls, with the exception of the verification items for tie rods and anchorage work, shall be equivalent to the performance criteria and design situation of sheet pile quaywalls classified as high earthquake-resistance facilities.

e) Double sheet pile quaywalls (high earthquake-resistance facilities)
Among the settings in connection with the performance criteria and design situation (limited to accidental situations) of quaywalls classified as high earthquake-resistance facilities, those applicable to double sheet pile quaywalls shall be equivalent to the settings of the performance criteria and design situation of sheet pile quaywalls classified as high earthquake-resistance facilities.

f) Performance criteria of quaywalls with relieving platform (high earthquake-resistance facilities)
Among the settings in connection with the performance criteria and design situation (limited to

accidental situations) of quaywalls classified as high earthquake-resistance facilities, those applicable to quaywalls with relieving platform shall be equivalent to the settings of the performance criteria and design situation for gravity-type quaywalls and sheet pile quaywalls classified as high earthquake-resistance facilities, corresponding to the structural characteristics of the respective members.

g) Cellular-bulkhead quaywalls (high earthquake-resistance facilities)
Among the settings in connection with performance criteria and design situation (limited to accidental situations) of quaywalls classified as high earthquake-resistance facilities, those applicable to cellular-bulkhead quaywalls shall be equivalent to the settings of the performance criteria and design situation for gravity-type quaywalls classified as high earthquake-resistance facilities.

[Technical Note]

2.1.1 Dimensions of Wharves

(1) Dimensions of Wharves

① Length
The length of a wharf used in performance verification of the wharf shall be set as the value obtained by adding the necessary lengths of the bow and stern mooring lines to the total length of the design ship, preconditioned on exclusive use of the objective wharf by the design ship.

② Water depth
The water depth used in performance verification of a wharf shall be set as the value obtained by adding the keel clearance corresponding to the design ship to the maximum draft, for example, the load draft, etc., of the design ship in order to obtain a value which will not hamper use of the design ship.

③ The crown height of a wharf used in performance verification of the wharf shall give appropriate consideration to the assumed use conditions of the facilities, so as to enable safe and smooth use of the wharf.

④ Shape of wall and front toe
In addition to the items provided here, in performance verification of wharves, the shape of the wall and front toe of the wharf (clearance limits of structure) shall be set so that the ship does not come into contact with the wharf members during berthing.

(2) Length, Water Depth and Layout of Berths

① It is preferable that the length and water depth of berths be set to appropriate values based on a study of the main dimensions of ships, etc.

② When a vessel is moored parallel to a wharf, the mooring lines shown in **Fig. 2.1.1** are required. The bow and stern lines are usually set at an angle of 30 to 45º with the quay face, because these lines are used to prevent both the longitudinal movement (in the bow and stern directions) and lateral movement (in the onshore and offshore directions) of the vessel.

③ The water depth of berths can be calculated using equation **(2.1.1)**. Here, the maximum draft represents the maximum draft in a calm water condition, such as when the ship is moored, etc., in the operating condition, e.g. Full load draft of the design ship. For the keel clearance, in general, it is preferable to use a value equal to approximately 10% of the maximum draft. Provided, however, in mooring facilities where sheltering by ships in a moored condition in abnormal weather or the like is conceivable, addition of a keel clearance which considers wind and wave factors, etc. is necessary.

$$\text{Berth water depth} = \text{Maximum draft} + \text{Under Keel Clearance} \qquad (2.1.1)$$

④ In case of a berth where flammable dangerous cargoes are handled, it is necessary to secure a distance of 30 m or more from oil tanks, boilers, and working areas that use open fire to the cargo handling area and the mooring vessel at the berth. However, when there is no risk that the cargo will catch fire in the event of leakage because of the surrounding topography or structure of the facilities of the berth, the distance may be shortened to around 15 m.

⑤ In case of a berth where flammable dangerous cargoes are handled by tankers, etc., it is necessary to secure a distance of 30 m or more from other anchored vessels and also to secure a distance of 30 m or more from other vessels navigating nearby in order to provide a room for their maneuvering. However, this distance may be increased or decreased as necessary in consideration of the size of the cargo carrying vessel, the type and size of vessels anchored or navigating nearby, and the condition of ship congestion.

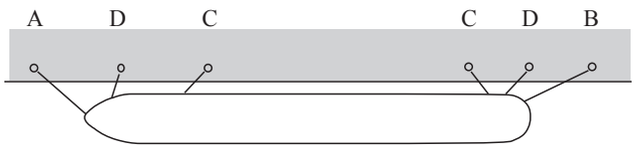

A: bow line
B: stern line
C: spring lines
D: breast lines

Fig. 2.1.1 Arrangement of Mooring Ropes

⑥ Standard values of wharf dimensions

In setting the length and water depth of a wharf in cases where the design ship cannot be identified, the standard values of the main dimensions of wharves by ship type shown in **Table 2.1.1** can be used. Here, the standard values have been set based on the standard values of the main dimensions of the design ships shown in **Part II, Chapter 8 Ships, Table 1.1**. In principle, the standard values shown in **Table 2.1.1** have been set assuming that the design ship moors parallel to the wharf; however, the standard values for ferries have been set also assuming cases of bow and stern side docking type wharves. In the standard values for small cargo ships, because there are large deviations in comparison with other ship types, as with the standard values of the main dimensions of design ships, due consideration of this point is necessary when applying the standard values shown in **Table 2.1.1** in setting the length and water depth of wharves for small cargo ships. Here, the gross tonnage GT in **Table 2.1.1**, **4 to 7** is basically international gross tonnage, but there are also cases in which domestic gross tonnage is used, corresponding to the features of the data used in setting the standard values. In **Table 2.1.1**, in cases where gross tonnage GT refers to domestic gross tonnage, a note to that effect is added.

Table 2.1.1 Standard Values of Main Dimensions of Berths in Cases where Design Ship cannot be Identified

1. Cargo Ships

Self weight tonnage DWT (t)	Length of berth (m)	Water depth of berth (m)
1,000	80	4.5
2,000	100	5.5
3,000	110	6.5
5,000	130	7.5
10,000	160	9.0
12,000	170	10.0
18,000	190	11.0
30,000	240	12.0
40,000	260	13.0
55,000	280	14.0
70,000	300	15.0
90,000	320	17.0
120,000	350	18.0
150,000	370	20.0

2. Container Ships

Self weight tonnage DWT (t)	Length of berth (m)	Water depth of berth (m)	(Reference) Container capacity (TEU)
10,000	170	9.0	500 – 890
20,000	220	11.0	1,300 – 1,600
30,000	250	12.0	2,000 – 2,400
40,000	300	13.0	2,800 – 3,200
50,000	330	14.0	3,500 – 3,900
60,000	350	15.0	4,300 – 4,700
100,000	400	16.0	7,300 – 7,700

3. Tankers

Self weight tonnage DWT (t)	Length of berth (m)	Water depth of berth (m)
1,000	80	4.5
2,000	100	5.5
3,000	110	6.5
5,000	130	7.5
10,000	170	9.0
15,000	190	10.0
20,000	210	11.0
30,000	230	12.0
50,000	270	14.0

4. Roll-on Roll-off (RORO) ships

Gross tonnage GT (t)	Length of berth (m)	Water depth of berth (m)
3,000	150	7.0
5,000	180	7.5
10,000	220	9.0
20,000	240	10.0
40,000	250	12.0
60,000	270	12.0

(3,000, 5,000, 10,000GT : Domestic Gross Tonnage)

5. Pure Car Carriers (PCC)

Gross tonnage GT (t)	Length of berth (m)	Water depth of berth (m)
3,000	150	6.5
5,000	170	7.0
12,000	180	7.5
20,000	200	9.0
30,000	230	10.0
40,000	240	11.0
60,000	260	12.0

(3,000, 5,000GT : Domestic Gross Tonnage)

6. Passenger Ships

Gross tonnage GT (t)	Length of berth (m)	Water depth of berth (m)
3,000	130	5.0
5,000	150	5.5
10,000	180	7.5
20,000	220	9.0
30,000	260	9.0
50,000	310	9.0
70,000	340	9.0
100,000	370	9.0

7. Ferries

7–1 Intermediate- and Short-Distance Ferries (sailing distance less than 300km in Japan)

Gross tonnage GT (t)	Case of bow and stern side docking type		
	Length of berth (m)	Length of bow and stern side docking type quaywall (m)	Water depth of berth (m)
400	60	20	3.5
700	80	20	4.0
1,000	90	25	4.5
3,000	140	25	5.5
7,000	160	30	7.0
10,000	190	30	7.5
13,000	220	35	8.0

(In all cases, domestic gross tonnage.)

7–2 Long-Distance Ferries (sailing distance of 300km or more in Japan)

Gross tonnage GT (t)	Case of no bow and stern side type docking	Case of bow and stern side type docking		Water depth of berth (m)
	Length of berth (m)	Length of berth (m)	Length of bow and stern side docking type quaywall (m)	
6,000	190	170	30	7.5
10,000	220	200	30	7.5
15,000	250	230	40	8.0
20,000	250	230	40	8.0

(In all cases, domestic gross tonnage.)

8. Small Cargo Ships

Self weight tonnage DWT (t)	Length of berth (m)	Water depth of berth (m)
500	60	4.0
700	70	4.0

(3) Crown Height of Wharves

① As the tidal level used as the datum for the crown height of wharves, the mean monthly-highest water level can be used.

② In cases where the design ship cannot be identified, in general, the values shown in **Table 2.1.2** are widely used. It should be noted that the values in this table are expressed using the mean monthly-highest water level as a standard.

Table 2.1.2 Standard Crown Heights of Wharves

	Tidal range 3.0m or more	Tidal range less than 3.0m
Wharf for large vessels (water depth of 4.5m or more)	+0.5–1.5m	+1.0–2.0m
Wharf for small vessels (water depth of less than 4.5m)	+0.3–1.0m	+0.5–1.5m

(4) Clearance Limit of Wharves

① The shape of the wall and front toe of the wharves shall be set appropriately so as not come into contact with ships during berthing.

② In the cross sections of a vessel, the bottom corner sections are slightly rounded and have projecting bilge keels. In many cases, the radius of curvature of the corner sections and the height of the bilge keels are 1.0 to 1.5 m and 30 to 40 cm, respectively. Therefore the envelope of corner sections may be assumed to be nearly 90º, including the bilge keels. The planned water depths of berths are generally deeper than the load draft of the design vessel by 0.3 m or more.

③ **Fig. 2.1.2** shows the clearance limit for wharves set in consideration of the above facts and past examples.[1), 2)] The clearance limit of wharves may be determined using this figure as reference. However, care should normally be exercised in using the clearance limit shown in the figure, because the rolling, pitching, and heaving motions of vessel at berth have not been taken into consideration in the figure.

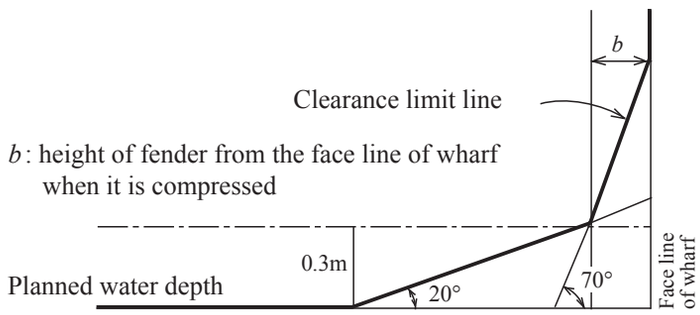

Fig. 2.1.2 Clearance Limit for Mooning Facilities

(5) Design Water Depth

① The design water depth of a wharf shall be determined by considering its planned water depth as well as the structural type, the original sea bottom depth, the method and accuracy of execution of work, and the the result of scouring in front of the mooring facility.

② In general, the design water depth is not equal to the planned water depth. The design water depth is ordinarily obtained by adding a margin to the planned water depth in order to guarantee the required stability of the mooring facility. As this margin will vary according to the structural type, the water depth of the site, the construction method and accuracy, and the result of scouring, it is important to determine the design water depth carefully in consideration of these factors.

③ When it is difficult to determine the depth of scouring due to berthing vessels or currents, it is advisable to provide scour prevention measures as described in **2.1.2 Protection against Scouring**.

2.1.2 Protection against Scouring

In cases where large scouring is anticipated at the front side of a wharf due to currents or turbulence generated by ship propellers, etc., the front of the mooring facility shall be protected with armor stones, concrete blocks, or other materials as a measure against scouring.

2.2 Gravity-type Quaywalls

Public Notice

Performance Criteria of Gravity-type Quaywalls

Article 49

The performance criteria of gravity-type quaywalls shall be as specified in the subsequent items:

(1) The risk of sliding failure of the ground under the permanent action situation in which the dominant action is self weight shall be equal to or less than the threshold level.

(2) The risk of failure due to sliding or overturning of the quaywall body or insufficient bearing capacity of the foundation ground under the permanent action situation in which the dominant action is earth pressure and under the variable action situation in which the main action is Level 1 earthquake ground motions shall be equal to or less than the threshold level.

[Commentary]

(1) Performance Criteria of Gravity-type Quaywalls

① The commentary of the performance criteria and design situation (excluding accidental situations) of gravity-type quaywalls shall be as shown in **Attached Table 29**. In addition to this code, the settings in connection with the Standard **Public Notice, Article 22, Paragraph 3** (Scouring and Sand Washing Out) shall be applied as necessary, and the settings in connection with **Article 23** and **Article 27** shall be applied corresponding to the type of members comprising the objective gravity-type quaywall.

Attached Table 29 Settings of Performance Criteria and Design Situation (Excluding Accidental Situations) of Gravity-type Quaywalls

Ministerial Ordinance			Public Notice			Performance requirements	Design situation			Verification item	Index of standard limit value
Article	Paragraph	Item	Article	Paragraph	Item		Situation	Dominating actions	Non-dominating actions		
26	1	2	49	1	1	Serviceability	Permanent	Self weight	Water pressure, surcharge	Circular slip failure of ground	System failure probability in permanent situation for self weight and earth pressure (Earthquake-resistance facilities: P_f=1.0x10^{-3}) (Facilities other than earthquake-resistance facilities: P_f=4.0x10^{-3})
								Earth pressure	Self weight, water pressure, surcharge	Sliding, overturning of quaywall, bearing capacity of foundation ground	
							Variable	L1 earthquake ground motion	Self weight, earth pressure, water pressure, surcharge	Sliding, overturning of quaywall, bearing capacity of foundation ground	Limit value for sliding Limit value for overturning Limit value for bearing capacity (Allowable deformation of quaywall crown: Da=10cm)

[Technical Note]

2.2.1 Fundamentals of Performance Verification

(1) Depending on the type of wall structure, gravity-type quaywalls are classified as caisson type quaywalls, L-shaped block type quaywalls, mass concrete block type quaywalls, cellular concrete block type quaywalls, cast-in-place concrete type quaywalls, upright wave-dissipating type quaywalls, and others. The description provided herein can be applied to performance verification of these gravity-type quaywalls. Regarding upright wave absorbing type quaywalls, the performance verification method shown in **2.11 Upright Wave-absorbing Type Quaywalls** can be used as reference.

(2) An example of the performance verification procedure for gravity-type quaywalls is shown in **Fig. 2.2.1**.

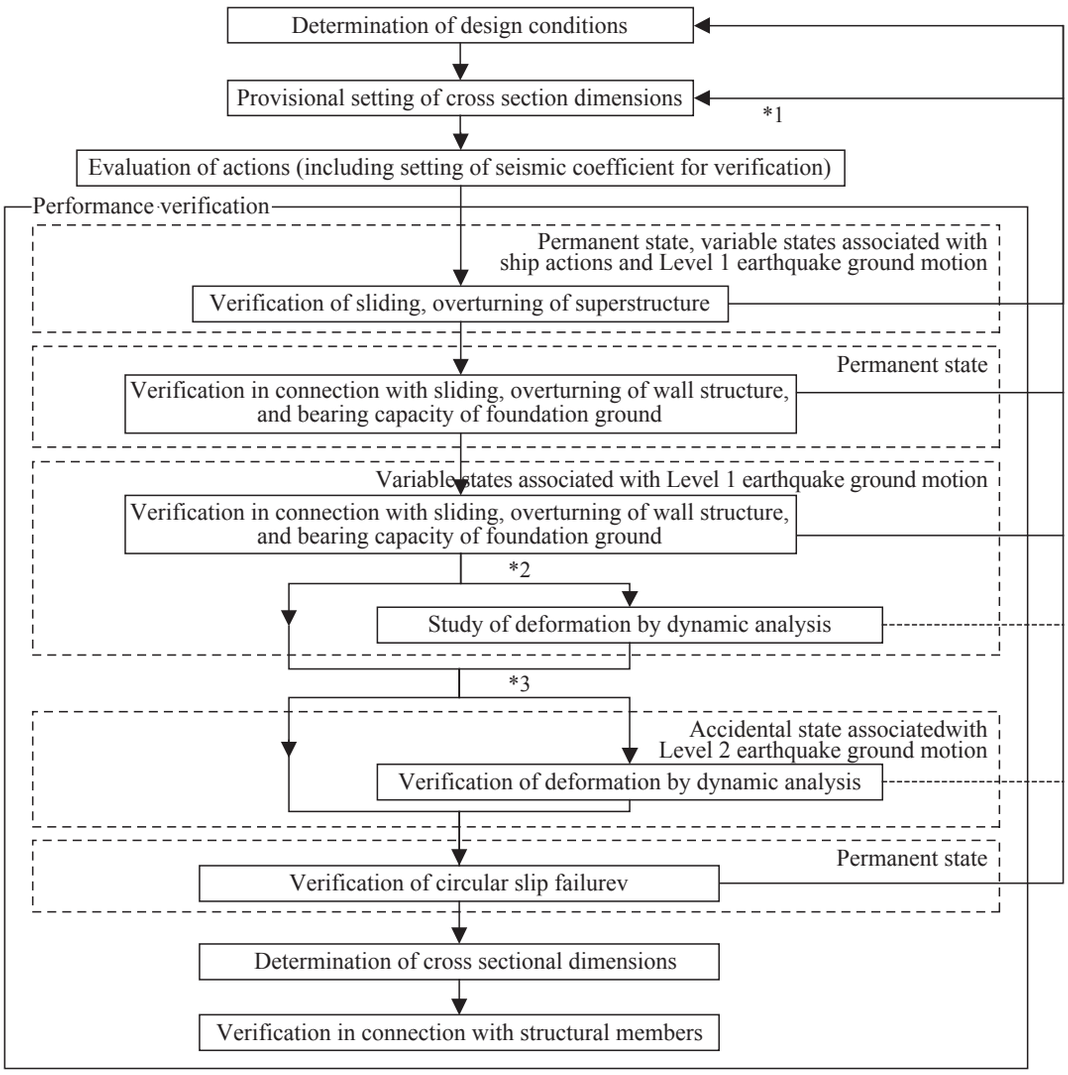

*1 As Evaluations of the effects of liquefaction, subsidence etc. are not included in this procedure, separate consideration is necessary.

*2 When necessary, study of deformation by dynamic analysis for Level 1 earthquake ground motion is possible. In earthquake-resistance facilities, study of deformation by dynamic analysis is preferable.

*3 For earthquake-resistance facilities, verification for level 2 earthquake ground motion is performed.

Fig. 2 2.1 Example of Performance Verification Procedure for Gravity-type Quaywalls

(3) An example of the cross section of a gravity-type quaywall is shown in **Fig. 2.2.2**.

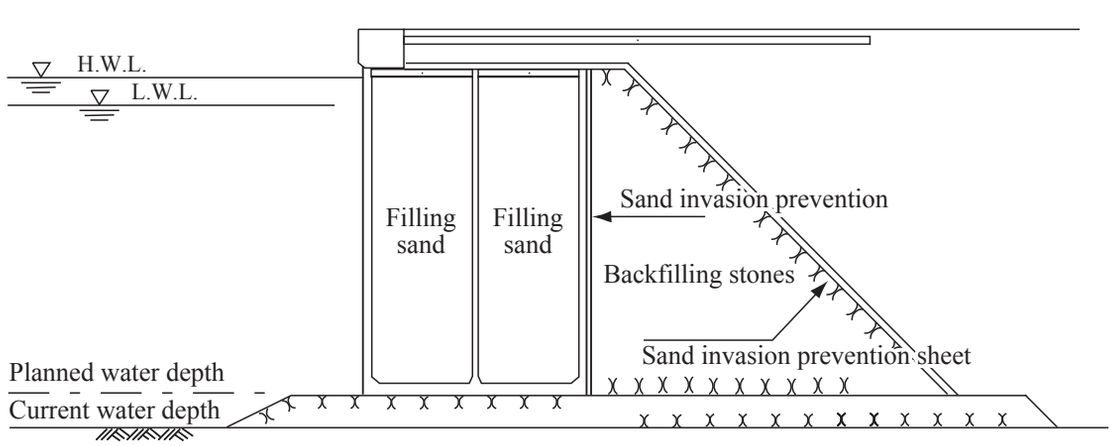

Fig. 2.2.2 Example of Cross Section of Gravity-type Quaywall

2.2.2 Actions

(1) Seismic coefficient for verification used in verification of damage due to sliding and overturning of wall body and insufficient bearing capacity of foundation ground in variable situations in respect of Level 1 earthquake ground motion [9), 10)]

① As the seismic coefficient for verification used in performance verification, it is necessary to set an appropriate seismic coefficient corresponding to the deformation of the facilities concerned, considering the effects of the frequency characteristics and duration of the ground motion and other relevant factors. The procedure of the generally-used method of calculating the seismic coefficient for verification is as shown in **Fig. 2.2.3**.

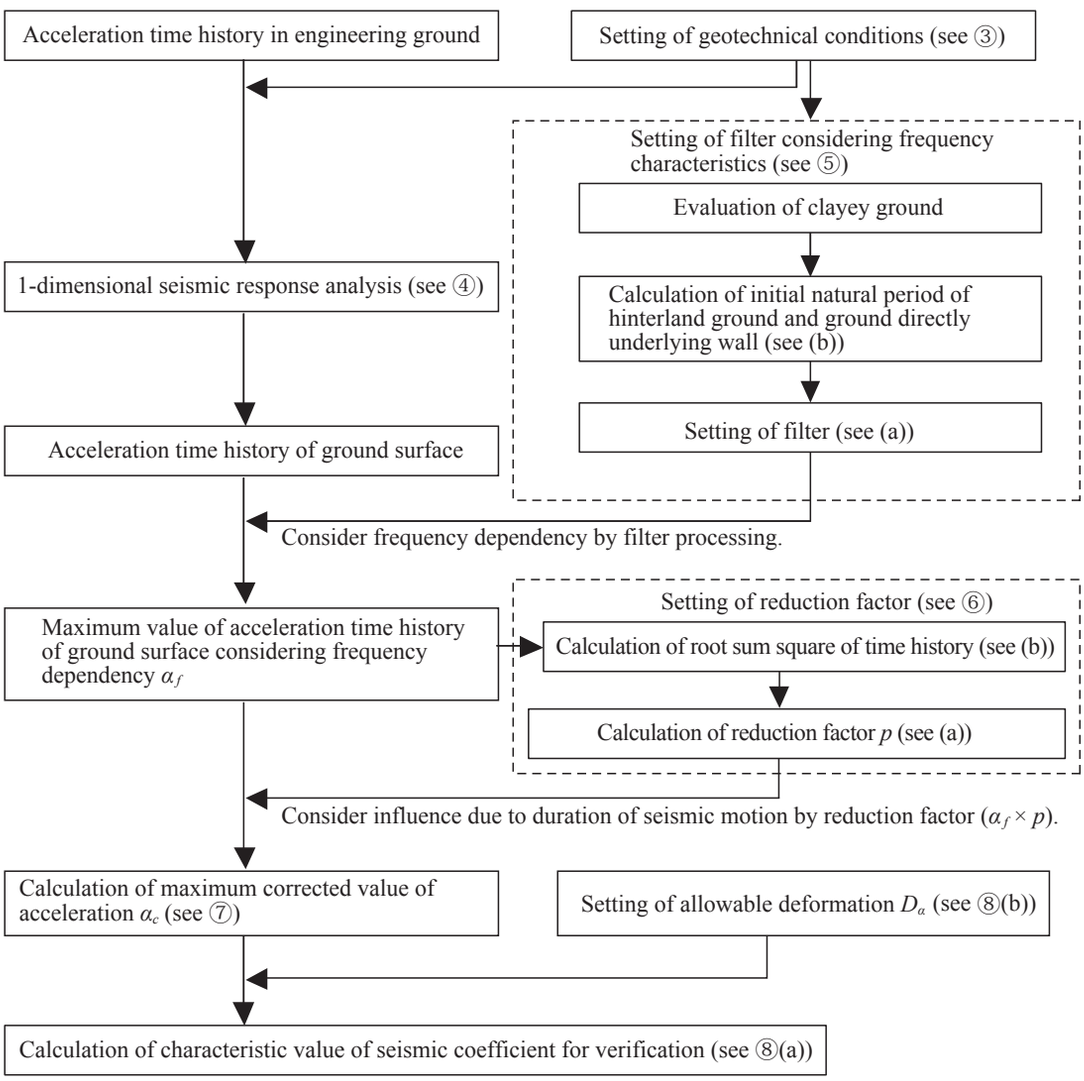

Fig. 2.2.3 Example of Procedure for Calculation of Seismic Coefficient for Verification

② The outline of the method of calculating the seismic coefficient for verification is shown in **Fig. 2.2.4**. First, the acceleration time history of the ground surface is calculated by setting the Level 1 earthquake ground motion in the bedrock and performing a 1-dimensional seismic response analysis using this as the input ground motion. A fast Fourier transform (FFT) is performed on the acceleration time history obtained in this manner to obtain the acceleration spectrum of the ground surface. Filter processing is then performed on the result, taking into consideration frequency characteristics corresponding to the deformation of the gravity-type quaywall. The filter used here obtains the maximum value of acceleration at the free surface of the ground from the results of a seismic response analysis performed on multiple sine waves of different frequencies in such way that the horizontal residual displacement of the crown of the gravity-type quaywall becomes the target value, and assesses the contribution to deformation of the quaywall of each frequency component of the ground motion. Accordingly, after filtering, the spectrum is a uniform deformation spectrum. As a result, the maximum value of acceleration obtained after an inverse fast Fourier transform (IFFT) is independent of frequency and is assigned

a correspondence with a certain amount of deformation. Next, the corrected peak acceleration α_c at the ground surface is obtained by obtaining the maximum acceleration from the acceleration time history after filtering, and multiplying α_f by a reduction factor p which considers the duration of the ground motion. The characteristic value of the seismic coefficient for verification is calculated using this corrected peak acceleration α_c and the allowable deformation D_a at the crown of the quaywall. It should be noted that the method of calculating the characteristic value of the seismic coefficient for verification differs in cases where soil improvement is performed using the deep mixing method and sand compaction (SCP) with a replacement rate of more than 70%. Therefore, it is necessary to refer to the following ⑨(e).

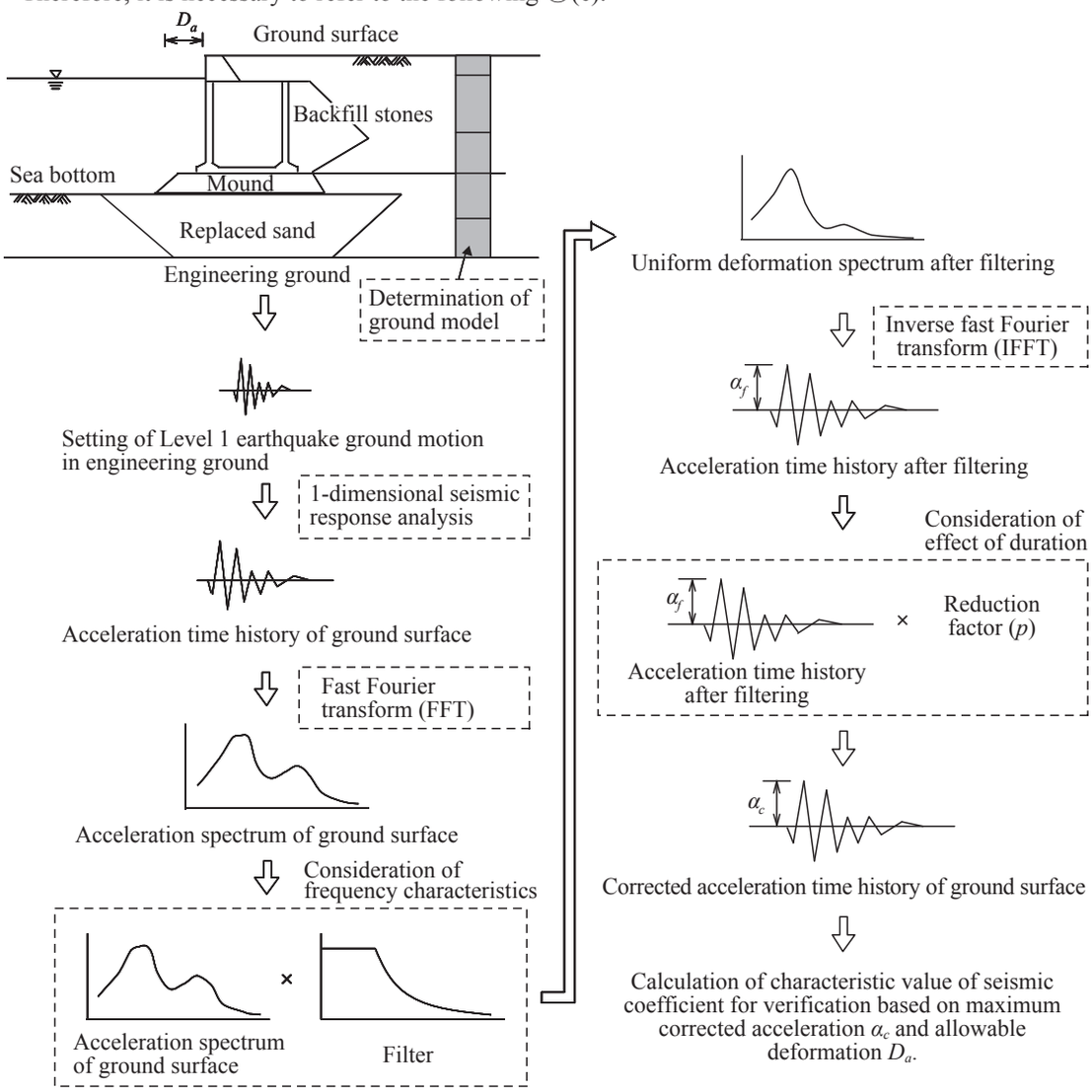

Fig. 2.2.4 Outline of Method of Calculating Seismic Coefficient for Verification

③ Setting of geotechnical conditions

In calculating the seismic coefficient for verification, it is necessary to define the geotechnical conditions so as to enable an appropriate assessment of the geotechnical characteristics at the location concerned. In defining the geotechnical conditions, **Part II, Chapter 3 Geotechnical Conditions**, **Part II, ANNEX 4, 1 Seismic Response Analysis of Local Soil Deposit** may be used as reference. In 1-dimensional seismic response analysis, the object is the layered ground, as shown in the ground model in **Fig. 2.2.4**, and the effects of the mound and local ground factors such as the backfilling stones, sand replacement, and the like are not considered.

④ One-dimensional seismic response analysis

The acceleration time history of the ground surface is calculated by a 1-dimensional seismic response analysis which enables appropriate consideration of the ground characteristics at the location concerned, using the Level 1 earthquake ground motion set for the bedrock as the input ground motion. The 1-dimensional seismic response analysis shall be performed based on and appropriate method and setting of analysis conditions, referring to **ANNEX 4, 1 Seismic Response Analysis of Local Soil Deposit**.

⑤ Setting of filter considering frequency characteristics

(a) Setting of filter

As a filter which considers the frequency characteristics of ground motion used in verification of gravity-type quaywalls, the result given by equation **(2.2.1)** may be used. This is a filter which obtains the maximum acceleration at the free ground surface of the ground from the results of a seismic response analysis performed on multiple sine waves using quaywall models with different geotechnical conditions and water depths in such a way that the horizontal residual displacement of the crown of the gravity-type quaywall becomes the target value, and assesses the contribution to deformation of the quaywall by the waves of each frequency component comprising the ground motion. In this method, if the frequency is large, an extremely large input ground motion is necessary in order to cause deformation of the wall, and if the frequency is small, equivalent deformation occurs due to an input ground motion of the same order. In other words, because deformation occurs easily in the small frequency band and tends not to occur in the large frequency band, the filter comprises a flat region with a large value of b for frequencies of 1.0Hz and under, and a region in which frequencies greater than 1.0Hz attenuate rapidly.

$$a(f)=\begin{cases} b & 0<f\le 1.0 \\ \dfrac{b}{1-\left(\dfrac{f-1.0}{1/0.34}\right)^2+6.8\left(\dfrac{f-1.0}{1/0.34}\right)\mathrm{i}} & 1.0<f \end{cases} \tag{2.2.1}$$

$$b=1.05\frac{H}{H_R}-0.88\frac{T_b}{T_{b_R}}+0.96\frac{T_u}{T_{u_R}}-0.23$$

where

a : filter considering frequency characteristics of ground motion
f : frequency (Hz)
H : wall height (m)
H_R : standard wall height (= 15.0m)
T_b : initial natural frequency of hinterland ground (s)
T_{bR} : standard initial natural frequency of ground (= 0.8s)
T_u : initial natural frequency of ground underneath of wall (s)
T_{uR} : standard initial natural frequency of ground underneath of wall (= 0.4s)
i : imaginary unit

The value of b shall be set as a value in the range shown by equation **(2.2.2)** using the wall height H of the quaywall. However, irrespective of the range set in equation **(2.2.2)**, in all cases, the lower limit shall be 0.28.

$$0.04H+0.08\le b\le 0.04H+0.44 \tag{2.2.2}$$

Provided, however, $b\ge 0.28$.

where

H : wall height (m)

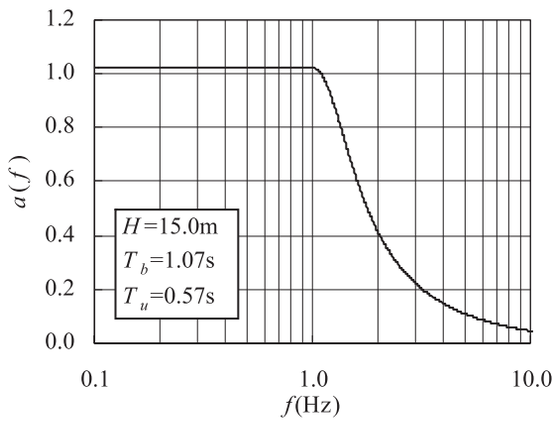

Fig. 2.2.5 Example of Filter

(b) Calculation of natural frequency of ground and ground direct underneath of wall

In calculations of the natural frequency for equation **(2.2.1)**, calculations may be made by equation **(2.2.3)** using the thickness of the respective soil layers above the seismic bedrock defined in the 1-dimensional seismic response analysis and the shear wave velocity. As the natural frequency of the ground, the primary natural period of the frequency response function obtained using linear multiple reflection theory may be used. In this case, if the shear wave velocity cannot be obtained, this may be estimated from the *N* value of the ground or other appropriate values, referring to **Part II Chapter 3, 2.4 Dynamic Analysis**. Provided, however, that, in calculating the initial natural period of the ground T_b and the initial natural period of the ground underneath of the wall T_u, backfilling stones and rubble stones directly under the wall shall not be evaluated using the physical properties of those materials, but by substituting the physical properties of the original ground. In cases where soil improvement is performed on normally consolidated clay strata, etc. using replacement sand or similar, limited to the area directly under a gravity-type quaywall, it is necessary to evaluated T_b and T_u in the state prior to soil improvement. That is, T_b and T_u can be calculated at the positions shown in **Fig. 2.2.6**. Because the effective surcharge pressure will vary, the natural period for the ground under the sea bottom may not be used.

$$T = 4\sum_i \frac{H_i}{V_{s_i}} \tag{2.2.3}$$

where

T : natural period of ground (s)

H_i : thickness of layer i (m)

V_{Si} : shear wave velocity in layer i(m/s)

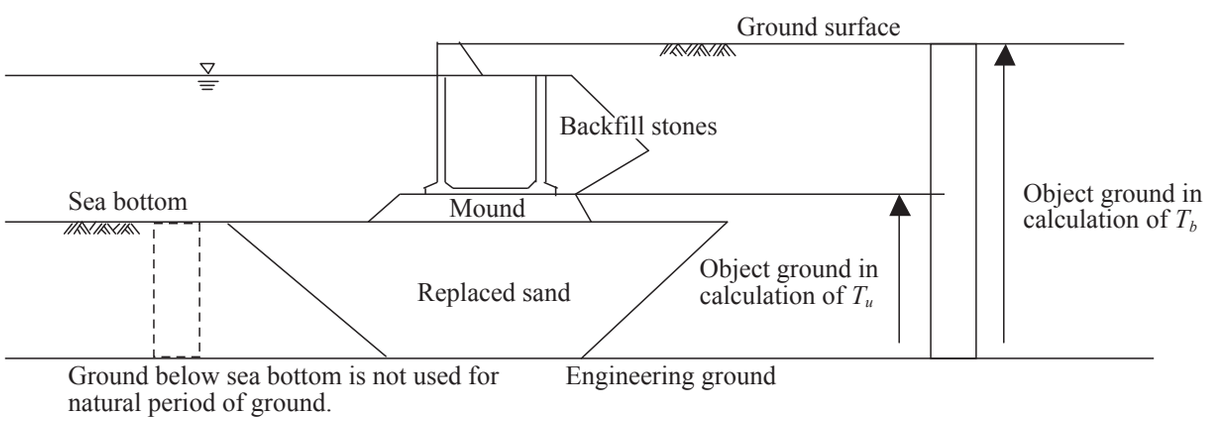

Fig. 2.2.6 Object Ground in Calculation of Natural Period

⑥ Setting of reduction factor

(a) Setting of reduction factor

Even with the same maximum acceleration of ground motion, the effect on facilities will vary depending on the duration of the ground motion. The reduction factor p, which considers the effect of the duration of

ground motion, can be set from equation **(2.2.4)**, using the root sum square S of the acceleration time history and the maximum acceleration α_f of the ground surface on which filtering was performed. Equation **(2.2.4)** was obtained statistically based on the above-mentioned numerical analysis. The upper limit of the reduction factor is 1.0.

$$p = 0.36\ln\left(S/\alpha_f\right) - 0.29 \tag{2.2.4}$$

where

p : reduction factor ($p \leq 1.0$)
S : root sum square of acceleration time history after filtering (cm/s^2)
α_f : maximum acceleration after filtering (cm/s^2)

(b) Calculation of root sum square of time history

The root sum square S of the acceleration time history used in calculating the reduction factor is calculated from equation **(2.2.5)** using the acceleration time history of the ground surface on which filtering was performed. Calculations of the root sum square shall be performed for the total duration of ground motion. The sampling frequency of ground motion shall be 100Hz.

$$S = \sqrt{\sum acc^2} \tag{2.2.5}$$

where

S : root sum square of acceleration time history (cm/s^2)
acc : acceleration after filtering at respective times (cm/s^2)

⑦ Calculation of maximum correction acceleration

The maximum correction acceleration α_c can be calculated from equation **(2.2.6)** using the maximum acceleration α_f of the ground surface after filtering, considering the frequency characteristics of the ground motion and the reduction factor p calculated considering the effect of duration.

$$\alpha_c = p\alpha_f \tag{2.2.6}$$

where

α_c : maximum correction acceleration (cm/s^2)
α_f : maximum acceleration after filtering (cm/s^2)
p : reduction factor

⑧ Calculation of characteristic value of seismic coefficient for verification

(a) Characteristic value of seismic coefficient for verification

The characteristic value of the seismic coefficient for verification k_{hk} which is used in performance verifications of gravity-type quaywalls can be calculated from equation **(2.2.7)** using the maximum compensated acceleration α_c and the allowable deformation D_a of the quaywall crown.

$$k_{h_k} = 1.78\left(\frac{D_a}{D_r}\right)^{-0.55}\frac{\alpha_c}{g} + 0.04 \tag{2.2.7}$$

where

k_{hk} : characteristic value of seismic coefficient for verification
α_c : maximum correction acceleration (cm/s^2)
g : acceleration of gravity (=980cm/s^2)
D_a : allowable deformation of quaywall crown (=10cm)
D_r : standard deformation (=10cm)

(b) Setting of allowable deformation

The allowable deformation of facilities must be set appropriately depending on the functions required in the facilities and the conditions where the facilities are located. The standard value of the allowable deformation of gravity-type quaywalls for Level 1 earthquake ground motion can be given as D_a=10cm. This standard allowable deformation (D_a=10cm) is the average value of residual deformation of existing gravity-type quaywalls for Level 1 earthquake ground motion calculated by seismic response analysis.

⑨ Notes on calculation of seismic coefficient for verification

(a) The method presented here was developed assuming conditions under which liquefaction does not occur. If the method is to be applied under other conditions, its applicability must be examined.

(b) The method presented here was prepared for allowable deformation D_a of 5-20cm. Therefore, care is necessary in cases where deformation outside of this range is adopted as the allowable value.

(c) Depending on the site, Level 1 earthquake ground motion may be underestimated. Therefore, if this method is used, there is a possibility that extremely small values will be obtained for the seismic coefficient for verification. In such cases, the lower limit shall be set at 0.05, considering the uncertainty of hazard analysis when calculating Level 1 earthquake ground motion, the accuracy of the method of calculating the seismic coefficient for verification, the method of defining allowable deformation, and similar factors.

⑩ In cases where examination of the vertical direction by the seismic coefficient for verification is necessary in the seismic coefficient method, it is necessary to set an appropriate seismic coefficient for verification depending on the characteristics of the facilities, characteristics of the ground, etc.

(2) For the seismic coefficient for verification used in performance verification of structural members in accidental situations associated with Level 2 earthquake ground motion, calculation based on appropriate examination is preferable. For convenience, the seismic coefficient for verification used in performance verification of structural members in accidental situations associated with Level 2 earthquake ground motion may be calculated by the method described in the above (1), using the acceleration time history of the ground surface of the free ground area. In this case, the allowable deformation D_a can be set at 50cm. However, in cases where this method is used, a value greater than the seismic coefficient for verification for Level 1 earthquake ground motion must be used, with an upper limit of 0.25. Provided, however, that in case the seismic coefficient for verification for Level 1 earthquake ground motion exceeds 0.25, the higher value shall be used.

(3) Determination of Wall Body Portion

① In cases where stability is to be confirmed by substituting inertia forces for seismic forces, it is necessary to assess the inertia force based on an appropriate determination of the quaywall body. In this case, the quaywall body may be defined as shown below, depending on the type of structure. Provided, however, that in cases where deformation is assessed directly by a detailed method such as nonlinear effective stress analysis or the like, examination by this method shall not be required.

② As shown in **Fig. 2.2.7**, the wall body of a gravity-type quaywall can be taken as the portion between the face line of the quaywall and the vertical plane passing through the rear toe of the quaywall. Normally backfill is placed at the rear of the quaywall. In many types of gravity quaywalls, some part of this backfill acts as self-weight of the quaywall, and the portion of the backfill can be considered as a part of the quaywall body. It is difficult to apply this concept to all cases unconditionally, because the extent of backfill considered as a part of the quaywall body varies depending on the shape of the quaywall body and the mode of failure. In general, however, the extent of backfill considered as a part of the quaywall body can be defined as shown by hatching in **Fig. 2.2.7** to simplify the design calculation, because modest changes in the location of the quaywall body boundary plane do not affect the stability of the quaywall body significantly.

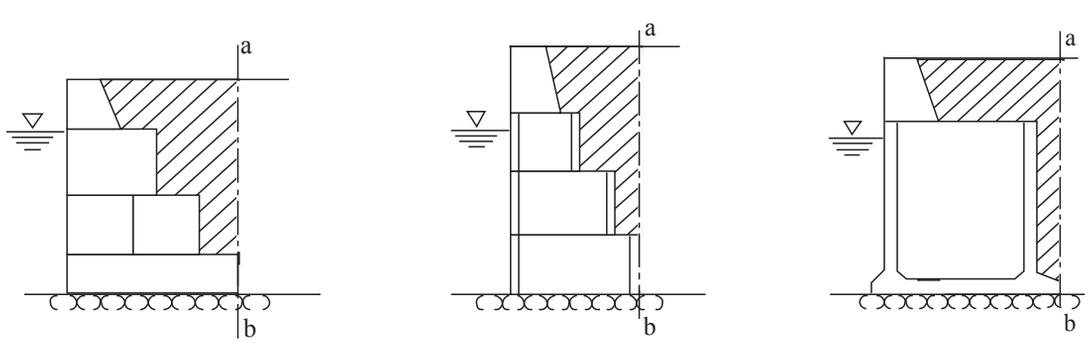

(b) Wall of concrete block type (c) Wall of cellular concrete block type (d) Wall of caisson type

Fig. 2.2.7 Determination of Quaywall Body

③ In structures in which stability must be examined in each horizontal stratum, as in block type quaywalls, the determination of the virtual wall body may be as follows. Normally, keys are provided between blocks for better

interlocking; however, in examination of the following items, it is preferable that the effect of the key structure be ignored.

(a) Examination of sliding
As shown in **Fig. 2.2.8**, the portion in front of the vertical plane passing through the rear toe at the level under examination can be regarded as wall body.

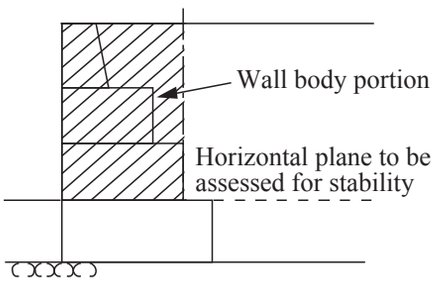

Fig. 2.2.8 Determination of Wall body Portion for Stability of Sliding at Horizontal Joints

(b) Examination of overturning
Backfill in front of a vertical plane passing through the most landward side edge among blocks stacked on a block placed on the seaward side above the plane subject to stability examination may be regarded as a part of the wall body. For example, in the case of a block-type quaywall, as in **Fig. 2.2.9**, in general, the weight of the portion on the front (shown by hatched lines) from the vertical plane through the block placed on block Ⓒ on the seaward side can be considered as resistance to overturning, but block Ⓑ and the weight of soil Ⓐ in contact therewith are considered not to contribute to resisting overturning.

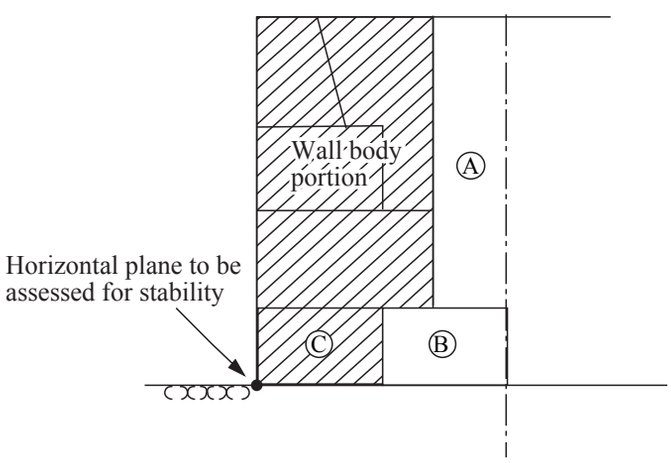

Fig. 2.2.9 Determination of Wall Body Portion for Stability Overturning

(c) Examination of failure due to inadequate bearing capacity of foundation ground
If calculations related to bearing capacity are made using the same virtual section as for overturning, the proportion of the design value of resistance relative to the design value of actions will be extremely small. However, when load actions from the wall body are concentrated locally on the ground, settlement will occur in that portion; therefore, in actuality, load action is distributed over a relatively extensive area and is not extremely concentrated. The results of examination of the stability of existing structures show that there is no objection to assuming the portion in front of the vertical plane passing through the rear toe of the wall body is a virtual wall body. In the case of cellular blocks, the bottom reaction appears to differ in the wall body and filling parts. In consideration of these facts, it is preferable that the bottom most block be a single block.

(4) The residual water level should be set at a level one-third of the tidal range above the mean monthly-lowest water level (LWL). In general, the range of residual water level difference increases as the tidal range increases and the permeability of the wall body material decreases. Water behind the wall body permeates through voids in wall joints, the foundation mound, and backfill. The residual water level difference can be reduced by improving the permeability of these materials. On the other hand, care is necessary, as this approach may result in leakage of the backfilling material. The above-mentioned value of the residual water level is applicable to cases in which long-term permeability can be secured. In cases where permeability is low from the initial stage or reduction of

permeability is expected over the long term, it is preferable to assume a large residual water level difference in consideration of those conditions. In cases where waves attack the front face of the wall body, the residual water level difference may also consider the wave trough; in general, however, it is not necessary to consider the increase in the residual water level difference due to attack by waves in performance verification of quaywalls.[11)]

(5) For the wall friction angle, in general, δ=15º can be used. For L-shaped blocks, the shear resistance angle of the backfilling material at the virtual back plane can be used. For details, **the Technical Manual for L-Shaped Block Quaywalls** [12)] may be used as a reference.

(6) The surcharge may be determined in accordance with **Part II, Chapter 10, 3 Surcharge**.

(7) Buoyancy is affected by numerous indeterminate factors. Therefore, it is preferable to set buoyancy considering the worst-case scenario for the facilities concerned. For example, as shown in **Fig. 2.2.10**, buoyancy may be calculated for the submerged portion of the wall body below the residual water level. Provided, however, that this approach is applicable to cases in which the difference between the front water level and the residual water level is within normal levels; in cases where the difference in water levels is remarkable, buoyancy must be set appropriately, depending on the natural conditions where the objective facilities concerned are located, and other relevant factors.

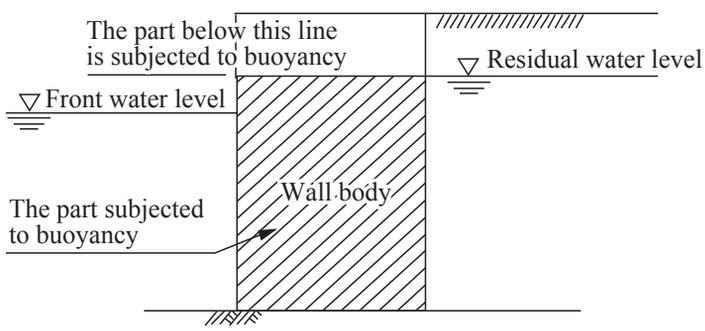

Fig. 2.2.10 Assumption for Calculating Buoyancy

(8) In earth pressure during action of ground motion, it is normal practice to use the equations for calculation of earth pressure proposed by Monobe and Okabe, as shown in **Part II, Chapter 5, 1 Earth Pressure**. However, this is based on the concept of the seismic coefficient method. The actual earth pressures resulting from the dynamic interaction of structures, soil, and water will vary. When the seismic coefficient for verification shown in **(1)** is used, verification corresponding to the deformation of the quaywall considering these points is possible. Provided, however, that in cases where the verification is not limited to the seismic coefficient method, but is performed using a combination of the seismic coefficient method and high accuracy seismic response analysis techniques (nonlinear effective stress analysis considering the dynamic interaction of the ground and structure, or the like) and/or techniques for actual physical assessment of deformation, such as model vibration tests, etc., when defining the cross section for which deformation is to be verified, the earthquake pressure generated in the wall body during earthquakes can be reduced to an intermediate value between the value given by the earth pressure equations proposed by Monobe and Okabe and the active earth pressure in the Permanent situation. Provided, however, that the content described herein may not be applied to structures other than gravity-type quaywalls.

(9) Effect of Earth Pressure Reduction by Backfill
In cases where good quality backfilling is placed (for example, a backfilling material with a shear resistance angle of 40° is used for rubble), the effect of earth pressure reduction by the backfill can be obtained using an analytical method (calculation of earth pressure by discrete method) which takes into consideration the composition of the soil behind the wall body and the strength of each layer behind the quaywall.[14)] In ordinary gravity-type quaywalls, rubble or cobble stones are used as the backfilling material. In this case, the effect of earth pressure reduction may be assessed using the following simplified method.[15)]

① When the cross section of backfill is triangular: When the backfill is laid in a triangular shape from the point of intersection of the vertical line passing through the rear toe of quaywall and the ground surface with an angle of slope less than the angle of repose α of the backfilling material, as shown in **Fig. 2.2.11**, it may be assumed that the entire rear of wall is filled with the backfilling material. Provided, however, that when the reclaiming material is slurry like cohesive soil, application of filling-up work or installation of sand invasion prevention sheets to the surface of the backfill shall be used to prevent the slurry cohesive soil from passing through the voids in the backfill and reaching the quaywall.

② When the cross section of backfill is rectangular: In the case of a triangular-shaped backfill with a slope steeper than the angle of repose of the backfilling material or any other irregular shape of backfill, the effect may be considered as in the case of rectangular-shaped backfill which has an area equivalent to the backfill in question. The effect of the rectangular backfill shown in **Fig. 2.2.11(b)** may be considered as follows: When the width b of the rectangular-shaped backfill is larger than the height of the wall, this case should be considered in the same manner as in the case of triangular backfill **Fig. 2.2.11**, and when the width b is equal to 1/2 of the height, it shall be assumed that the earth pressure is equivalent to the mean of earth pressure due to the backfill and that due to the reclaimed soil. If the width b is 1/5 or less of the height of the wall, the earth pressure reduction effect due to the backfill shall not be considered.

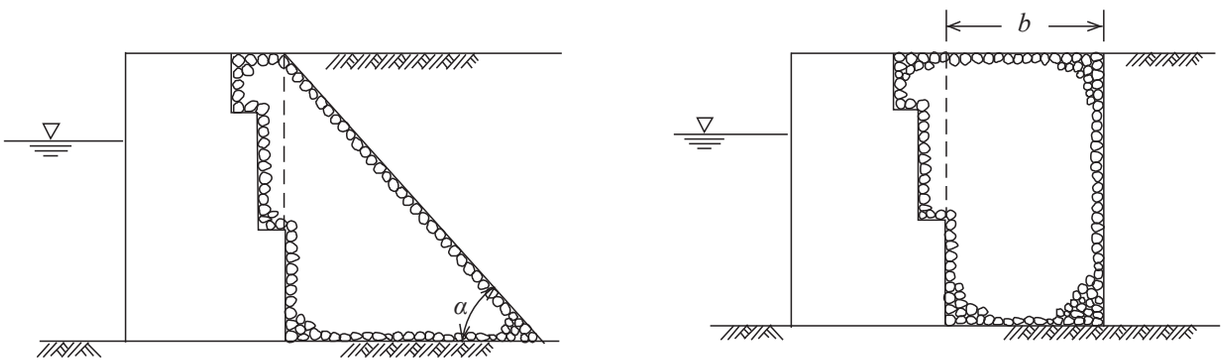

(a) Triangular shape backfill (b) Rectangular shape backfill

Fig. 2.2.11 Shape of Backfill

2.2.3 Performance Verification

(1) General

The stability of gravity-type quaywalls is maintained by the weight of the wall body. Therefore, in general, the following items are examined in the permanent situation and variable situations associated with Level 1 earthquake ground motion.

① Sliding of the wall
② Bearing capacity of the foundation ground
③ Overturning of the wall
④ Circular slip failure
⑤ Settlement

In cases where verification of sliding, overturning, and bearing capacity for variable situations associated with Level 1 earthquake ground motion is to be performed by the seismic coefficient method, verification may be performed by the following **(2)–(4)**. However, if verification is performed by a detailed method such as dynamic analysis or the like, this above-mentioned method cannot be applied. Verification by detailed methods such as dynamic analysis shall be performed in accordance with **(9) Performance Verification for Ground Motion (detailed methods)**.

(2) Examination of sliding of the wall in the permanent situation and variable situations associated with Level 1 earthquake ground motion

① Examination of stability against sliding of the wall may be performed using the following equation. In this equation, the symbol γ is the partial factor, and the suffixes *k* and *d* indicate characteristic values and design values, respectively.

$$f_d\left(W_d + P_{V_d} - P_{B_d}\right) \geq \gamma_a\left(P_{H_d} + P_{w_d} + P_{d_{wd}} + P_{F_d}\right) \tag{2.2.8}$$

where

f : coefficient of friction between bottom of wall and foundation
W : weight of materials comprising wall (kN/m)
P_V : resultant vertical force acting on wall (kN/m)
P_B : buoyancy acting on wall (kN/m)
P_H : resultant horizontal force acting on wall (kN/m)
P_W : resultant residual water pressure acting on wall (kN/m)

P_{dW} : resultant dynamic water pressure acting on wall (kN/m) (only during action of ground motion)
P_F : inertia force acting on wall (kN/m) (only during action of ground motion)
γ_a : structural analysis factor

The design values in the equation can be calculated using the following equations.

$$f_d = \gamma_f f_k$$

$$P_{H_d} = \gamma_{P_H} P_{H_k}$$

$$P_{V_d} = \gamma_{P_V} P_{V_k}$$

(Using the horizontal component, $P_{V_d} = \gamma_{P_H} P_{H_k} \tan(\delta + \psi)$ may be assumed) (2.2.9)

$$P_{d_{wd}} = \frac{7}{12} \gamma_{k_h} k_{h_k} \rho_w g h^2$$

$$P_{F_d} = \gamma_{k_h} k_{h_k} W_d$$

where

δ : friction angle on wall (°)
ψ : angle of wall to perpendicular (°)
ρ_w : density of seawater (kN/m^3)
g : acceleration of gravity (m/s^2)
h : water depth at wall front (depth from wall bottom to water level at wall front) (m)
k_h : seismic coefficient for verification

The characteristic values of the horizontal and vertical components of earth pressure may be calculated using equation **(1.2.7)** and equation **(1.2.8)** in **Part II, Chapter 5, 1.2.1 Earth Pressure of Sandy Soil**, respectively. However, for the residual water level when calculating earth pressure, the characteristic value shall be used.

The design value of residual water pressure P_{Wd} shall be calculated appropriately referring to **Part II, Chapter 5, 2.1 Residual Water Pressure**, after calculating the design value of the residual water level. The design value of the residual water level RWL_d can be calculated using the following equation **(2.2.10)**.

$$\mathrm{RWL}_d = \gamma_{\mathrm{RWL}} \mathrm{RWL}_k \tag{2.2.10}$$

The design value of the weight of the quaywall W_d can be calculated by the following equation, using the weight of reinforced concrete w_{RC}, weight of non-reinforced concrete w_{NC}, and weight of filling sand w_{SAND}.

$$W_d = \sum \gamma_w w_k \tag{2.2.11}$$

② In examination of sliding of the wall, vertical force can be considered as follows.

(a) The weight of the wall, not including surcharges (load of bulk cargoes, etc.) anterior to the virtual boundary plane with the wall, and subtracting buoyancy.

(b) Vertical component of earth pressure acting on virtual boundary plane.

③ In examination of sliding of the wall, horizontal force can be considered as follows.

(a) Horizontal component of the earth pressure acting on the virtual boundary plane with the wall, in a state with a surcharge applied.

(b) Residual water pressure

(c) In performance verification for action of ground motion, in addition to the above, the inertia force and dynamic water pressure acting on the wall shall be considered. As earth pressure, the horizontal component of earth pressure during ground motion shall be used. In cases where cargo handling equipment is present on the wall, the horizontal force of the legs shall be considered.

④ The coefficient of friction shall conform to **Part II, Chapter 11, 9 Friction Coefficient**.

(3) Examination of bearing capacity of foundation ground in permanent situation and variable situations associated with Level 1 earthquake ground motion

① In many cases, gravity-type quaywalls are structures which are susceptible to settlement and inclination of the wall. Therefore, performance verification of the foundation shall be performed so as to avoid impairment of

functions due to settlement or inclination of the wall.

② In examinations of shallow foundations, the force acting on the bottom of the wall is the resultant force of loads acting in the vertical and horizontal directions, and therefore may be examined using **Chapter 2, 2.2 Shallow Spread Foundations, 2.2.5 Bearing Capacity for Eccentric and Inclined Actions**. As the standard partial factor used in performance verification, the values shown in **Table 2.2.2** may be used.

③ The following equation may be used in examination of the stability of the bottom of the wall as it relates to the bearing capacity of the ground. In the following equation, the symbol γ is the partial factor, and the suffixes *k* and *d* indicate characteristic values and design values, respectively.

$$\sum\left[\{c'_d s + (w'_d + q_d)\tan\phi'_d\}\sec\theta \big/ (1+\tan\theta\tan\phi'_d/F_f)\right] \Big/ \left[\gamma_a\left[\sum\{(w'_d+q_d)\sin\theta\} + \alpha P_{H_d}/R\right]\right] = F_f \geq 1.0 \tag{2.2.12}$$

where

c' : in case of clayey ground, undrained shear strength, and in case of sandy ground, apparent cohesion in an undrained condition (kN/m2)
s : width of segment (m)
w' : weight of segment (kN/m)
q : load of surcharge acting on segment (kN/m)
ϕ' : apparent shear resistance angle based on effective stress (°)
θ : angle of segment with bottom (°)
F_f : parameter showing that the design value of resistance exceeds the design value of action if 1.0 or higher
R : radius of slip circle (m)
γ_a : structural analysis factor
α : arm length from the center of the slip circle at the circular slip failure of the action point of P_{Hd} (m)
P_{Hd} : design value of horizontal action to the soil mas in the slip circle of circular slip failure (kN/m)

For the design values in the equation, in addition to referring to equation **(2.2.9)**, design values can also be calculated using the following equation **(2.2.13)**.

$$\begin{aligned} c'_d &= \gamma_{c'} c'_k \\ w'_d &= \gamma_{w'} w'_k \\ q_d &= \gamma_q q_k \\ \tan\phi'_d &= \gamma_{\tan\phi'} \tan\phi'_k \end{aligned} \tag{2.2.13}$$

④ In general, examination of the bearing capacity of the foundation ground is performed for a case in which no surcharge is applied to the wall. However, when a surcharge is applied to the wall, eccentricity decreases, but the resultant vertical force increases. Therefore, examination must also be performed in case a surcharge is applied, as necessary.

⑤ The thickness of the foundation mound can be determined by examining inadequacy of the bearing capacity of the foundation ground, the flatness of mound surface for installing the wall body, and alleviation of partial stress concentration in the ground, etc. It is preferable that the minimum thickness satisfy the following values.

(a) For a quaywall with a water depth of less than 4.5m, a thickness of 0.5m or more; provided, however, that the thickness of the mound is at least 3 times the diameter of the rubble.

(b) For a quaywall with a water depth of 4.5m or more, a thickness of 1.0m or more; provided, however, that the thickness of the mound is at least 3 times the diameter of the rubble.

(4) Examination of overturning of wall in permanent situation and variable situations associated with Level 1 earthquake ground motion

① Examination of the stability of the wall against overturning can be performed using the following equation. In the following equation, the symbol γ is the partial factor for the related suffix, and the suffixes *k* and *d* indicate characteristic values and design values, respectively.

$$aW_d - bP_{B_d} + cP_{V_d} \geq \gamma_a(dP_{H_d} + eP_{w_d} + hP_{dw_d} + iP_{F_d}) \tag{2.1.14}$$

where

W : weight of materials comprising wall (kN/m)
P_B : buoyancy acting on wall (kN/m)

P_V : resultant vertical earth pressure acting on wall (kN/m)
α : arm length from the center of the slip circle at the circular slip failure of the action point of P_{Hd} (m)
P_{Hd} : design value of horizontal action to the soil mas in the slip circle of circular slip failure (kN/m)
R : radius of slip circle (m)
γ_a : structural analysis factor

The design values in the equation can be calculated using equation **(2.2.9)**. The design value of residual water pressure P_{Wd} can be calculated referring to **Part II, Chapter 5, 2.1 Residual Water Pressure**, after calculating the design value of the residual water level RWL_d using equation **(2.2.10)**. For the design value of the weight of materials comprising the wall W_d in the equation, equation **(2.2.11)** can be used. In cases where caissons have footings with a rectangular cross section on both the sea and shore sides, equation **(2.2.12)** can be used for the design value of buoyancy P_{Bd}.

(5) Examination of Sliding Failure of Ground in Permanent Situation

① In cases where the foundation ground is weak, circular slip failure from an arbitrary point behind intersection of the vertical plane through the rear toe of the wall and the bottom plane of the rubble may be examined.

② Verification of circular slip failure of the foundation ground in the permanent situation as it relates to self weight can be performed using the following equation. In the following equation, the symbol γ is the partial factor for the related suffix, and the suffix k indicates characteristic values.

$$\sum\left[\left\{c'_d s + (w'_d + q_d)\cos^2\theta \tan\phi'_d\right\}\sec\theta\right] \geq \sum\left\{(w'_d + q_d + q_{\mathrm{RWL}_d})\sin\theta\right\} \tag{2.2.15}$$

where

c' : in case of clayey ground, undrained shear strength, and in case of sandy ground, apparent cohesion in an undrained condition (kN/m^2)
s : width of segment (m)
w' : weight of segment (kN/m)
q : load of surcharge acting on segment (kN/m)
q_{RWL} : in case the residual water level (RWL) at the back of the facility is higher than the water level (LWL) at the front of the facility, the weight of the water at the segment corresponding to the difference in these water level $\rho_w g(\mathrm{RWL} - \mathrm{LWL})s$ (kN/m)
ϕ' : apparent shear resistance angle based on effective stress (°)
θ : angle of segment with horizontal plane (°)

The design values in the equation can be calculated using the following equations. The design value of the residual water level can be calculated using equation **(2.2.10)**.

$$\begin{aligned} c'_d &= \gamma_{c'} c'_k \\ q_d &= \gamma_q q_k \\ \tan\phi'_d &= \gamma_{\tan\phi'} \tan\phi'_k \\ q_{\mathrm{RWL}_d} &= \rho_w g(\mathrm{RWL}_d - \mathrm{LWL})s \end{aligned} \tag{2.2.16}$$

(6) Examination of Settlement

For gravity-type quaywalls, the stability of the structure against settlement due to consolidation of the ground, etc. shall be secured, corresponding to the characteristics of the ground and the structure.

(7) Performance verification and partial factors for sliding, overturning, bearing capacity of the foundation ground, and circular slip failure

① Standard partial factors for system failure probability related to sliding and overturning of the wall, bearing capacity of the foundation ground, and circular slip failure in the permanent situation for gravity-type quaywalls can be determined referring to the values in **Table 2.2.2(a)**. If based on the average safety standards in past design methods, the average system reliability index for the stability of the wall body is 2.3 (if converted to failure probability, 1.1 x 10^{-2}), and the average reliability index for circular slip failure is 7.0 (failure probability, 1.1 x 10^{-12}). When considering the expected total cost expressed by the sum of the initial construction cost and the cost of recovery incurred in case of failure, the system reliability index which minimizes the expected total cost is 3.1 (failure probability, 1.0 x 10^{-3}) for high earthquake-resistance facilities and 2.7 (failure probability, 4.0 x 10^{-3}) for other quaywalls. The partial factors for sliding and overturning of the wall and bearing capacity of the foundation ground in variable situations associated with Level 1 earthquake ground motion can be determined referring to the values in **Table 2.2.2(b)**. The partial factors shown in **Table 2.2.2(b)** were

determined considering the average system reliability of the past design method.

② As partial factors for circular slip failure, in case of soil improvement using sand compaction (SCP) with a replacement rate of 30-80% under the wall body, those given in this part, **Chapter 2, 4 Soil Improvement Methods** for the sand compaction pile method (**4.10.6 Performance Verification**) shall be used.

Table 2.2.2 Standard Partial Factors [16)]

(a) Permanent situation

			High earthquake-resistance facilities				Other facilities			
Target system reliability index β_T			3.1				2.7			
Target system failure probability P_{fT}			1.0×10^{-3}				4.0×10^{-3}			
Target system reliability index β_T' used in calculation of γ			3.31				2.89			
			γ	α	μ/X_k	V	γ	α	μ/X_k	V
Sliding	γ_f	Friction coefficient	0.55	0.946	1.06	0.15	0.60	0.935	1.06	0.15
	γ_{P_H} , γ_{P_V}	Resultant of earth pressure	1.15	-0.288	1.00	0.12	1.15	-0.316	1.00	0.12
	γ_{RWL}	Residual water level	1.00	-0.024	1.00	0.05	1.00	-0.027	1.00	0.05
	$\gamma_{W_{\mathrm{RC}}}$	Unit weight of RC	0.95	0.026	0.98	0.02	0.95	0.028	0.98	0.02
	$\gamma_{W_{\mathrm{NC}}}$	Unit weight of NC	1.00	0.009	1.02	0.02	1.00	0.01	1.02	0.02
	$\gamma_{W_{\mathrm{SAND}}}$	Unit weight of filling sand	1.00	0.143	1.02	0.04	1.00	0.157	1.02	0.04
	γ_a	Structural analysis factor	1.00	—	—	—	1.00	—	—	—
Overturning	γ_{P_H} , γ_{P_U}	Resultant of earth pressure	1.35	-0.832	1.00	0.12	1.30	-0.842	1.00	0.12
	γ_{RWL}	Residual water level	1.05	-0.092	1.00	0.05	1.05	-0.092	1.00	0.05
	$\gamma_{W_{\mathrm{RC}}}$	Unit weight of RC	0.95	0.097	0.98	0.02	0.95	0.094	0.98	0.02
	$\gamma_{W_{\mathrm{NC}}}$	Unit weight of NC	1.00	0.035	1.02	0.02	1.00	0.034	1.02	0.02
	$\gamma_{W_{\mathrm{SAND}}}$	Unit weight of filling sand	0.95	0.538	1.02	0.04	0.95	0.521	1.02	0.04
	γ_a	Structural analysis factor	1.00	—	—	—	1.00	—	—	—
Bearing capacity of foundation ground	γ_{P_H}	Resultant of earth pressure	1.15	-0.328	1.00	0.12	1.15	-0.345	1.00	0.12
	$\gamma_{w'}$	Unit weight of foundation ground	1.00	0.032	1.00	0.03	1.00	0.033	1.00	0.03
	γ_q	Surcharge	1.00	0.031	1.00	0.04	1.00	0.032	1.00	0.04
	$\gamma_{\tan\phi'}$	Soil strength: Tangent of angle of shear resistance	0.70	0.903	1.00	0.10	0.70	0.894	1.00	0.10
	$\gamma_{c'}$	Soil strength: Cohesion	0.90	0.252	1.00	0.10	0.90	0.257	1.00	0.10
	γ_{RWL}	Residual water level	1.00	-0.023	1.00	0.05	1.00	-0.024	1.00	0.05
	γ_a	Structural analysis factor	1.00	—	—	—	1.00	—	—	—
Circular slip failure	$\gamma_{c'}$	Soil strength: Cohesion	0.90	0.407	1.00	0.04	0.90	0.406	1.00	0.04
	$\gamma_{\tan\phi'}$	Soil strength: Tangent of angle of shear resistance	0.90	0.330	1.00	0.04	0.90	0.320	1.00	0.04
	γ_{w_i} When mound is positioned below level of sea bottom	1Ground, wave-dissipating works, etc. above level of sea bottom	1.10	-0.176	1.00	0.03	1.10	-0.173	1.00	0.03
		2 Sandy soil below level of mound and sea bottom	0.90	0.227	1.00	0.03	0.90	0.227	1.00	0.03
		3 Clayey soil below level of sea bottom	1.00	0.000	1.00	0.03	1.00	0.000	1.00	0.03
	γ_{w_i} When mound is positioned above level of sea bottom	1 Ground, wave-dissipating works, etc. above level of sea bottom	1.10	-0.176	1.00	0.03	1.10	-0.173	1.00	0.03
		2 Sandy soil below level of sea bottom	0.90	0.227	1.00	0.03	0.90	0.227	1.00	0.03
		3 Clayey soil below level of sea bottom	1.00	0.000	1.00	0.03	1.00	0.000	1.00	0.03
	γ_q	Surcharge	1.80	-0.543	1.00	0.40	1.70	-0.551	1.00	0.40
	γ_{RWL}	Residual water level	1.10	-0.014	1.00	0.05	1.10	-0.015	1.00	0.05

*1: α: sensitivity factor, μ/X_k: deviation of mean value (mean value/characteristic value), V: coefficient of variation.
*2: RC: reinforced concrete, NC: non-reinforced concrete.
*3: When calculating the resultant of earth pressure, for the soil strength, friction angle of wall, unit weight, residual water level, surcharge, etc., the characteristic values (values not considering partial factors) shall be used.
*4: Surcharges (except in the case of circular slip) and sea level shall be set without considering partial factors.
*5: γ_{w_1}, γ_{w_2}, and $\gamma_{w_3}$are partial factors for the weights of segments and shall be set in accordance with the classification in Fig. 2.2.13.
*6: Wave-dissipating works, etc. include wave-dissipating works, covering work, foot protection, and the like.
*7: Partial factors for the unit weight of soil and pavement at the top of caissons can be set in the same manner as the unit weight of filling sand.
*8: In application of the partial factors for circular slip failure, refer to the notes shown in this volume, Chapter 2.3 Stability of Slopes, 3.1.(7), Partial Factors. When soil improvement is performed by the Sand Compaction Pile (SCP) method with a replacement rate of 30-80%, the partial factors shown for the Sand Compaction Pile method in this volume, Chapter 2.4 Soil Improvement Methods, 4.10.6 Performance Verification shall be used.

Table 2.2.2 Standard Partial Factors
(b) Variable situation for Level 1 earthquake ground motion

			All facilities			
Performance requirement			Serviceability			
			γ	α	μ/X_k	V
Sliding	γ_f	Friction coefficient	1.00	—	—	—
	γ_{PH}, γ_{PU}	Resultant of earth pressure	1.00	—	—	—
	γ_{k_h}	Seismic coefficient for verification	1.00	—	—	—
	γ_{RWL}	Residual water level	1.00	—	—	—
	$\gamma_{W_{\mathrm{RC}}}$	Unit weight of RC	1.00	—	—	—
	$\gamma_{W_{\mathrm{NC}}}$	Unit weight of NC	1.00	—	—	—
	$\gamma_{W_{\mathrm{SAND}}}$	Unit weight of filling sand	1.00	—	—	—
	γ_a	Structural analysis factor	1.00	—	—	—
Overturning	γ_{PH} , γ_{PU}	Resultant of earth pressure	1.00	—	—	—
	γ_{k_h}	Seismic coefficient for verification	1.00	—	—	—
	γ_{RWL}	Residual water level	1.00	—	—	—
	$\gamma_{W_{\mathrm{RC}}}$	Unit weight of RC	1.00	—	—	—
	$\gamma_{W_{\mathrm{NC}}}$	Unit weight of NC	1.00	—	—	—
	$\gamma_{W_{\mathrm{SAND}}}$	Unit weight of filling sand	1.00	—	—	—
	γ_a	Structural analysis factor	1.10	—	—	—
Bearing capacity of foundation ground	γ_{P_H}	Resultant of earth pressure	1.00	—	—	—
	γ_{k_h}	Seismic coefficient for verification	1.00	—	—	—
	$\gamma_{w'}$	Unit weight of foundation ground	1.00	—	—	—
	γ_q	Surcharge	1.00	—	—	—
	$\gamma_{\tan\phi'}$	Soil strength: Tangent of angle of shear resistance	1.00	—	—	—
	$\gamma_{c'}$	Soil strength: Cohesion	1.00	—	—	—
	γ_{RWL}	Residual water level	1.00	—	—	—
	γ_a	Structural analysis factor	1.00	—	—	—

*1: α: sensitivity factor, μ/X_k: deviation of mean value (mean value/characteristic value), V: coefficient of variation.
*2: RC: reinforced concrete, NC: non-reinforced concrete.
*3: When calculating the resultant of earth pressure, the soil strength, friction angle of wall, unit weight, and residual water level shall be calculated without considering partial factors.
*4: Surcharges and sea level shall be set without considering partial factors.
*5: Partial factors for the unit weight of soil and pavement at the top of caissons can be set in the same manner as the unit weight of filling sand.

(8) Performance Verification of Cellular Blocks

① Unlike other gravity-type quaywalls, gravity-type quaywalls comprising cell blocks in which the wall body has no bottom slab form a structure that maintains integrity with the wall body by sand filling. Therefore, in addition to the examination of stability in other gravity-type quaywalls, overturning should be examined with due consideration given to separation of the filling.

② Stability verification equation for cellular blocks

Examination of overturning considering separation of the filling in cellular blocks can be performed using the following equation.

$$aW_d - bP_{B_d} + cP_{V_d} + M_{f_d} \geq \gamma_a (dP_{H_d} + eP_{w_d} + gP_{dw_d} + hP_{F_d}) \tag{2.2.17}$$

where

W : weight of materials comprising wall (kN/m)
P_B : buoyancy acting on wall (kN/m)
P_V : resultant vertical earth pressure acting on wall (kN/m)
Mf : resistant moment due to friction of wall surfaces with filling (kN-m/m)
P_H : resultant horizontal earth pressure acting on wall (kN/m)
P_W : resultant residual water pressure acting on wall (kN/m)

P_{dW} : resultant dynamic water pressure acting on body (kN/m) (only during action of ground motion)
P_F : inertia force acting on body (kN/m) (only during action of ground motion)
a : distance from action line of resultant weight of wall to front toe of wall (m)
b : distance from action line of buoyancy to front toe of wall (m)
c : distance from action line of resultant vertical earth pressure to front toe of wall (m)
d : distance from action line of resultant horizontal earth pressure to bottom of wall (m)
e : distance from action line of resultant residual water pressure to bottom of wall (m)
g : acceleration of gravity (m/s^2)
h : distance from action line of resultant dynamic water pressure to bottom of body (m) (only during action of ground motion)
γ_a : structural analysis factor

The design values in the equation can be calculated using equation **(2.2.9)** and the following equation **(2.2.18)**.

$$M_{f_d} = \gamma_{M_f} M_{f_k} \tag{2.2.18}$$

③ Values of partial factors
As standard values of partial factor for use in performance verification of cellular blocks, the partial factors for overturning shown in **Table 2.2.2** can be used. As the partial factor γ_{Mf} of the resistant moment due to friction between the wall surfaces and filling M_f, the same value as the partial factor γW_{SAND} for the weight of filling sand W_{SAND} may be used.

④ If (design value of resistance)/(design value of action) < 1, the overturning moment due to external forces is larger than the sum of the resistant moment of the resultant vertical force excluding the filling and friction between the wall surfaces and filling. As a result, the cellular block will separate, leaving the filling in place. In such cases, it is necessary to take appropriate measures such as increasing the weight of the cellular blocks or providing partition walls for cellular block.

⑤ The characteristic value M_f of the resistant moment due to friction F_1 and F_2 between the wall surfaces and the filling is obtained as follows. In **Fig. 2.2.12**, the moment around point A is $l_1F_1+1F_2$. Here, $F_1=P_1f$ and $F_2= P_2f$. The value of f is the coefficient of friction between the wall surface and the filling. (P_1 and P_2 are the respective earth pressures of the filling.) The concept of the earth pressure of the filling acting on the wall may conform to **Chapter 2, 1.4 Cellular Blocks**. It is also preferable to consider the frictional resistance acting on partition walls of cellular blocks in the same manner.

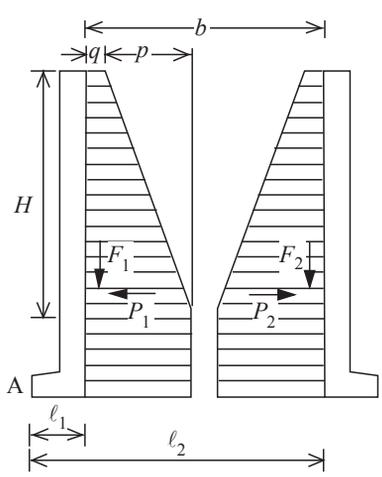

q : earth pressure due to the vertical load transmitted to filling
H : $H=b$
p : earth pressure due to filling
$p=KH\gamma'$
K : coefficient of earth pressure
γ' : unit weight of filling material in the water
P_1, P_2 : resultant force of earth pressure

Fig. 2.2.12 Determination of Frictional Resistance

⑥ The coefficient of friction used for the examination of the sliding of cellular concrete blocks with no bottom slab should be 0.6 for reinforced concrete and 0.8 for filling stones. However, for convenience, an average value of 0.7 can be used.

(9) Performance Verification for Ground Motion (detailed methods)
Performance verification of seismic-resistant of gravity-type quaywalls for Level 2 earthquake ground motion is performed by appropriate seismic response analysis or calculation of the amount of deformation, etc. of facilities

based on experimental results. Standard limit values for deformation in accidental situations associated with Level 2 earthquake ground motion may be set appropriately referring, **Chapter 5, 1.4 Standard Concept of Allowable Deformation of High Earthquake-resistance Facilities for Level 2 Earthquake Ground Motion**.

Performance verification techniques for deformation, etc. of facilities can be broadly classified into two types, namely, methods employing seismic response analysis and shaking tests using a shaking table or similar apparatus.

(a) Methods employing seismic response analysis

Seismic response analysis can be classified as shown in **Table 2.2.3**. In the following, the various types of seismic response analysis methods will be explained in accordance with these classifications. Depending on the seismic response analysis method, in some cases, these techniques may not be suitable for the purpose of verification of deformation, etc. Therefore, it is necessary to select an analysis technique corresponding to the intended purpose, based on the following explanation.

Table 2.2.3 Classification of seismic response analysis

Analysis method (treatment of saturated ground	Effective stress analysis method, total stress analysis method (individual layers and liquid layers, individual layers)
Object domain of calculation (dimensions)	1 dimension, 2 dimensions, 3 dimensions
General calculation models	Multiple reflection model, point mass model, finite element model
Material characteristics	Linear, equivalent linear, nonlinear
Calculation domain	Time domain analysis method, frequency domain analysis method

(b) Methods employing shaking tests

These are methods in which shaking is applied to a structure considering mechanical similarity, and are effective for assessing the total behavior of the structure including the ground. Provided, however, that a high level of experimental technology is necessary, including, for example, preparation of a model which adequately satisfies the condition of similarity, etc.

1) Model shaking table test in 1G gravity field

Based on consideration of the shape and mechanical characteristics of the target structure and ground, a model is prepared so as to satisfy similarity, and the assumed ground motion is applied in a gravitational field using a shaking table. In general, it is possible to prepare large-scale models, and it is also possible to examine cases involving complex ground and structural configurations. As the similarity law, laws which consider the confining pressure dependency of the physical properties of soil are widely used.[24)]

2) Model shaking table test using centrifugal loading device

This is a type of test in which stress states similar to those in the actual object are reproduced in a model using the centrifugal force generated by a centrifugal loading device. The assumed ground motion is applied by the shaking test device under conditions which satisfy the law of similarity. Models are generally small in scale; however, because a relationship between the properties of the soil and effective confining pressure is not assumed, experiments which consider confining pressure dependency are possible. Provided, however, that consideration based on a law of similarity is necessary for the coefficient of permeability, and care is also required with regard to the influence of the particle size of the ground material used in the test.

3) In-*situ* shaking table test

In this type of test, a model similar to the target structure or model of substantially the same scale is prepared, either at the location where construction is planned or under similar ground conditions, and the response of the model to artificial ground motion or natural ground motion is observed. Methods of generating artificial ground motion include use of a wave vibrator, methods employing explosion, and others.

2.2.4 Performance Verification of Structural Members

In performance verification of the superstructure of parts where fenders are installed, it is permissible to consider only the range in which the weight of the superstructure acts integrally. In cases where fenders are installed at locations where the superstructure and body are connected with reinforcing bars, etc., at mooring posts or similar, displacement of the superstructure where passive earth pressure functions effectively cannot be expected. Therefore, it is desirable that resistance against the reaction of the fenders be borne completely by the reinforcing rods. In performance verification of the superstructure cross section, the reaction of the fenders is assumed to be distributed as a linear load in the range of width b in **Fig. 2.2.13(a)**, and may be considered to act as shown in **Fig. 2.2.13(b)**. In many examples, the vertical direction verification is performed assuming a cantilever beam with the bottom edge of

the superstructure as a fulcrum, and the horizontal direction is verification performed assuming either a continuous beam or a simple beam with a rigid point in the body as a fulcrum.

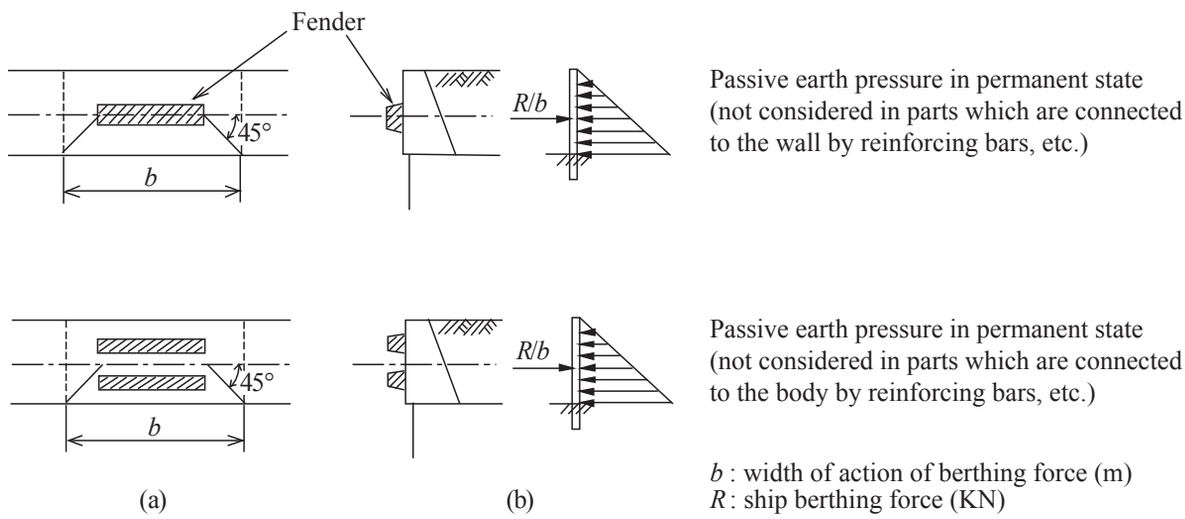

Fig. 2.2.13 Reaction of Protective Works Acting on Superstructure

2.3 Sheet Pile Quaywalls

Public Notice

Performance Criteria of Sheet Pile Quaywalls

Article 50

1 The performance criteria of sheet pile quaywalls shall be as specified in the subsequent items:

(1) Sheet pile shall have the embedment length as necessary for structural stability and contain the degree of risk that the stresses in the sheet piles may exceed the yield stress at the level equal to or less than the threshold level under the permanent action situation in which the dominant action is earth pressure and under the variable action situations in which the dominant action is Level 1 earthquake ground motions.

(2) The following criteria shall be satisfied under the permanent action situation in which the dominant action is earth pressure and under the variable action situation in which the dominant actions are Level 1 earthquake ground motions and traction by ships:

(a) For anchored structures, the anchorage shall be located in appropriate positions corresponding to the structural type, and the risk of losing the structural stability shall be equal to or less than the threshold level.

(b) For structures having ties and waling, the risk that the stresses in the ties and waling may exceed the yield stress shall be equal to or less than the threshold level.

(c) For structures having superstructures, the risk of impairing the integrity of the members of the superstructure shall be equal to or less than the threshold level.

(3) For structures having superstructures, the risk of impairing the integrity of the members of the superstructure shall be equal to or less than the threshold level under the variable action situation in which the dominant action is ship berthing.

(4) Under the permanent action situation in which the dominant action is self weight, the risk of occurrence of slip failure in the ground below the bottom end of the sheet pile shall be equal to or less than the threshold level.

2 In addition to the provisions in the preceding paragraph, the performance criteria of cantilevered sheet piles shall be such that the risk in which the amount of deformation of the top of the pile may exceed the allowable limit of deformation is equal to or less than the threshold level under the permanent action situations in which the dominant action is earth pressure and under the variable action situation in which the dominant actions are Level 1 earthquake ground motions, ship berthing, and traction by ships.

3 In addition to the provisions in the first paragraph, the performance criteria of double sheet pile structures shall be as specified in the subsequent items:

(1) The risk of occurrence of sliding of the structural body shall be equal to or less than the threshold level under the permanent action situations in which the dominant action is earth pressure and under the variable action situation in which the dominant action is Level 1 earthquake ground motions.

(2) The risk that the deformation of the top of the front or rear sheet pile may exceed the allowable limit of deformation shall be equal to or less than the threshold level under the permanent action situation in which the dominant action is earth pressure and under the variable action situation in which the dominant action is Level 1 earthquake ground motions.

(3) The risk of losing the stability due to shear deformation of the structural body shall be equal to or less than the threshold level under the permanent action situation in which the dominant action is earth pressure.

[Commentary]

(1) Performance Criteria of Sheet Pile Quaywalls

① The performance criteria of sheet pile quaywalls shall use the following, in accordance with the design situations excluding accidental situations and the constituent members.

Apart from these requirements, when necessary the setting of **Article 22 Item 3 of the Public Notice** shall be applied. When sheet pile with special connections or large connections is used, the performance criteria for the stresses occurring in the connections shall be appropriately set, as necessary.

② Sheet pile quaywalls (serviceability)

(a) Performance criteria of sheet pile

The setting of the performance criteria for sheet pile quaywalls and the design situations excluding accidental situations shall be in accordance with **Attached Table 30** for the sheet piles.

Attached Table 30 Setting of the Performance Criteria and the Design Situations (excluding accidental situations) for the Sheet Piles of Sheet Pile Quaywalls

Ministerial Ordinance			Public Notice			Performance requirements	Design situation			Verification item	Index of standard limit value
Article	Paragraph	Item	Article	Paragraph	Item		Situation	Dominating action	Non–dominating action		
26	1	2	50	1	1	Serviceability	Permanent	Earth pressure	Water pressure, surcharges	Necessary embedment length	System failure probability under permanent situations of self weight and earth pressure (High earthquake-resistance facility $P_f = 1.7\times10^{-4}$) (Other than high earthquake-resistance facility $P_f = 4.0\times10^{-3}$)
										Yielding of sheet pile	
							Variable	L1 earthquake ground motion	Earth pressure, water pressure, surcharges	Necessary embedment length	Design yield stress (allowable deformation of top of quaywall: D_a = 15cm)
										Yielding of sheet pile	

(b) Performance criteria of anchorage work

The setting of the performance criteria for sheet pile quaywalls and the design situations excluding accidental situations shall be in accordance with **Attached Table 31** for anchorage work.

Attached Table 31 Setting of the Performance Criteria and the Design situations (excluding accidental situations) for the Anchorage Work of Sheet Pile Quaywalls

Ministerial Ordinance			Public Notice			Performance requirements	Design situation			Verification item	Index of standard limit value
Article	Paragraph	Item	Article	Paragraph	Item		Situation	Dominating action	Non–dominating action		
26	1	2	50	1	2a	Serviceability	Permanent	Earth pressure	Water pressure, surcharges	Necessary embedment length	Embedment length required for structural stability
										Yielding of anchorage*1)	Design yield stress
										Axial forces in the anchorage*2)	Resistance force based on failure of the soil (push in, pull out)
										Stability of anchor wall*3)	・Passive earth pressure of anchored wall ・Design cross-section resistance (ultimate limit state)
							Variable	L1 earthquake ground motion	Earth pressure, water pressure, surcharges	Necessary embedment length	Embedment length required for structural stability (Allowable deformation of top of quaywall: D_a = 15cm)
										Yielding of anchorage*1)	Design yield stress (Allowable deformation of top of quaywall: D_a = 15cm)
										Axial forces in the anchorage*2)	Resistance force based on failure of the soil (push in, pull out) (Allowable deformation of top of quaywall: D_a = 15cm)
										Stability of anchor wall*3)	・Passive earth pressure of anchored wall ・Design cross-section resistance (ultimate limit state) (Allowable deformation of top of quaywall: D_a = 15cm)

*1): Only when the structural type of the anchorage is a vertical pile anchor, a coupled pile anchor, or sheet pile anchor.
*2): Only when the structural type of the anchorage is a coupled pile anchor.
*3): Only when the structural type of the anchorage is a wall anchor.

(c) Performance criteria of ties and waling

1) The setting of the performance criteria for sheet pile quaywalls and the design situations excluding accidental situations shall be in accordance with **Attached Table 32** for the ties and waling. For permanent situations where dominating action is earth pressure, and for variable situations where dominating action is Level 1 earthquake ground motion as shown in **Attached Table 32**, the index representing the risk of failure due to yielding of the tie members shall comply with that of the sheet pile.

Attached Table 32 Setting of the Performance Criteria and the Design Situations (excluding accidental situations) for the Ties and Waling of Sheet Pile Quaywalls

Ministerial Ordinance			Public Notice			Performance requirements	Design situation			Verification item	Index of standard limit value
Article	Paragraph	Item	Article	Paragraph	Item		Situation	Dominating action	Non–dominating action		
26	1	2	50	1	2b	Serviceability	Permanent	Earth pressure	Water pressure, surcharges	Required embedment	System failure probability under permanent situations of self weight and earth pressure (High earthquake-resistance facility $P_f = 1.7\times10^{-4}$) (Other than high earthquake-resistance facility $P_f = 4.0\times10^{-3}$)
										Yielding of waling	Design yield stress
							Variable	L1 earthquake ground motion	Earth pressure, water pressure, surcharges	Yielding of tie	Design yield stress (allowable deformation of top of quaywall: D_a = 15cm)
										Yielding of waling	Design yield stress (allowable deformation of top of quaywall: D_a = 15cm)
										Yielding of tie	Design yield stress
										Yielding of waling	Design yield stress

(d) Performance criteria of superstructures

The setting of the performance criteria for sheet pile quaywalls and the design situations excluding accidental situations shall be in accordance with **Attached Table 33** for the superstructure.

Attached Table 33 Setting of the Performance Criteria and the Design Situations (excluding accidental situations) for the Superstructure of Sheet Pile Quaywalls

Ministerial Ordinance			Public Notice			Performance requirements	Design situation			Verification item	Index of standard limit value
Article	Paragraph	Item	Article	Paragraph	Item		Situation	Dominating action	Non–dominating action		
26	1	2	50	1	2c	Serviceability	Permanent	Earth pressure	Water pressure, surcharges	Serviceability of cross-section of superstructure	Limit value of bending compression stress (serviceability limit state)
							Variable	L1 earthquake ground motion	Earth pressure, surcharges	Failure of cross-section of superstructure	Design cross-section resistance (ultimate limit state)
								Traction by ships			
					3			Berthing			

i) Serviceability of superstructure cross-section

Verification of serviceability of the superstructure cross-section is to verify that the risk that the bending compression stress in the superstructure will exceed the limit value of the bending compression stress is equal to or less than the limit value.

ii) Cross-section failure of the superstructure

Verification of cross-section failure of the superstructure is to verify that the risk that the design cross-section forces in the superstructure will exceed the design cross-section resistance is equal

to or less than the limit value.

(e) Performance criteria of the foundation grounds

a) The setting of the performance criteria for sheet pile quaywalls and the design situations excluding accidental situations shall be in accordance with **Attached Table 34** for the foundation grounds. The index representing the risk of occurrence of failure due to circular slip failure in the foundations under permanent situations where dominating action is the self weight indicated in **Attached Table 34** shall comply with that of sheet pile.

Attached Table 34 Setting of the Performance Criteria and the Design Situations (excluding accidental situations) for the Foundation Grounds of Sheet Pile Quaywalls

Ministerial Ordinance			Public Notice			Performance requirements	Design situation			Verification item	Index of standard limit value
Article	Paragraph	Item	Article	Paragraph	Item		Situation	Dominating action	Non–dominating action		
26	1	2	50	1	4	Serviceability	Permanent	Earth pressure	Water pressure, surcharges	Circular slip failure of ground	System failure probability under permanent situations of self weight and earth pressure (High earthquake-resistance facility P_f = 1.7×10–4) (Other than high earthquake-resistance facility P_f = 4.0×10–3)

b) Circular slip failure of the ground
Circular slip failure of the ground is slip failure of the ground passing under the bottom of the sheet pile.

③ Cantilevered sheet pile quaywalls (serviceability)

(a) Besides complying with the performance criteria of sheet pile quaywalls, excluding those with ties and waling, the setting of the performance criteria for cantilevered sheet pile quaywalls and the design situations excluding accidental situations shall be in accordance with **Attached Table 35**.

Attached Table 35 Setting of the Performance Criteria and the Design Situations (excluding accidental situations) for Cantilevered Sheet Pile Quaywalls

Ministerial Ordinance			Public Notice			Performance requirements	Design situation			Verification item	Index of standard limit value
Article	Paragraph	Item	Article	Paragraph	Item		Situation	Dominating action	Non–dominating action		
26	1	2	50	2	–	Serviceability	Permanent	Earth pressure	Water pressure, surcharges	Deformation of top of sheet pile	Limit value of amount of deformation
							Variable	L1 earthquake ground motion	Earth pressure, water pressure, surcharges		
								Traction by ships			

(b) Limit value of the amount of deformation of the top of the sheet pile
The limit value of the amount of deformation of the top of the sheet pile for permanent situations where the dominating action is earth pressure and the variable situations where dominating action are Level 1 earthquake ground motion, traction by ships, shall be set appropriately based on the envisaged conditions of use of the facility.

④ Double sheet pile quaywalls (serviceability)

(a) Besides applying the performance criteria of sheet pile quaywalls, the setting of the performance criteria for double sheet pile quaywalls and the design situations excluding accidental situations shall be in accordance with **Attached Table 36**. The index representing the risk of occurrence of failure due to sliding of the wall under permanent situations where dominating action is earth pressure and the variable situations where dominating action is Level 1 earthquake ground motion indicated in

Attached Table 36 shall comply with that of gravity-type quaywalls.

Attached Table 36 Setting of the Performance Criteria and the Design Situations (excluding accidental situations) for Double Sheet Pile Quaywalls

Ministerial Ordinance			Public Notice			Performance requirements	Design situation			Verification item	Index of standard limit value
Article	Paragraph	Item	Article	Paragraph	Item		Situation	Dominating action	Non–dominating action		
26	1	2	50	3	1	Serviceability	Permanent	Earth pressure	Self weight, water pressure, surcharges	Sliding of wall body	System failure probability under permanent situations of self weight and earth pressure (High earthquake-resistance facility $P_f = 1.0\times10^{-3}$) (Other than high earthquake-resistance facility $P_f = 4.0\times10^{-3}$)
			49	1	–		Variable	L1 earthquake ground motion	Self weight, earth pressure, water pressure, surcharges		Limit value for sliding (allowable amount of deformation D_a = 10cm)
			50	3	2		Permanent	Self weight	Water pressure, surcharges	Circular slip failure of ground	System failure probability under permanent situations of self weight and earth pressure (High earthquake-resistance facility $P_f = 1.7\times10^{-4}$) (Other than high earthquake-resistance facility $P_f = 4.0\times10^{-3}$)
								Earth pressure	Self weight, water pressure, surcharges	Deformation of the front and rear of the top of the sheet pile	Limit value of amount of deformation
							Variable	L1 earthquake ground motion	Self weight, earth pressure, water pressure, surcharges		
					3		Permanent	Earth pressure	Water pressure, surcharges	Shear deformation of wall body	Resistance moment

(b) Deformation of the top of the front and rear sheet pile
The limit value of the amount of deformation of the top of the sheet pile for the permanent situations where dominating action is earth pressure and the variable situations where dominating action is Level 1 earthquake ground motion shall be set appropriately based on the structural stability of the facility and the envisaged conditions of use of the facility.

(c) Shear deformation of wall body
Verification of shear deformation of wall body is to verify that the risk that the deformation moment in respect of the shear deformation of a wall body will exceed the resistance moment is equal to or less than the limit value.

[Technical Note]

2.3.1 Fundamentals of Performance Verification

(1) The performance verification of structural stability for a steel sheet pile quaywall with anchorage work can generally be conducted by checking the stabilities of the sheet pile wall, the tie rods and the anchorage work.

(2) An example of the sequence of the performance verification of sheet pile quaywalls is shown in **Fig. 2.3.1**.

(3) An example of the cross-section of sheet pile quaywalls is shown in **Fig. 2.3.2**.

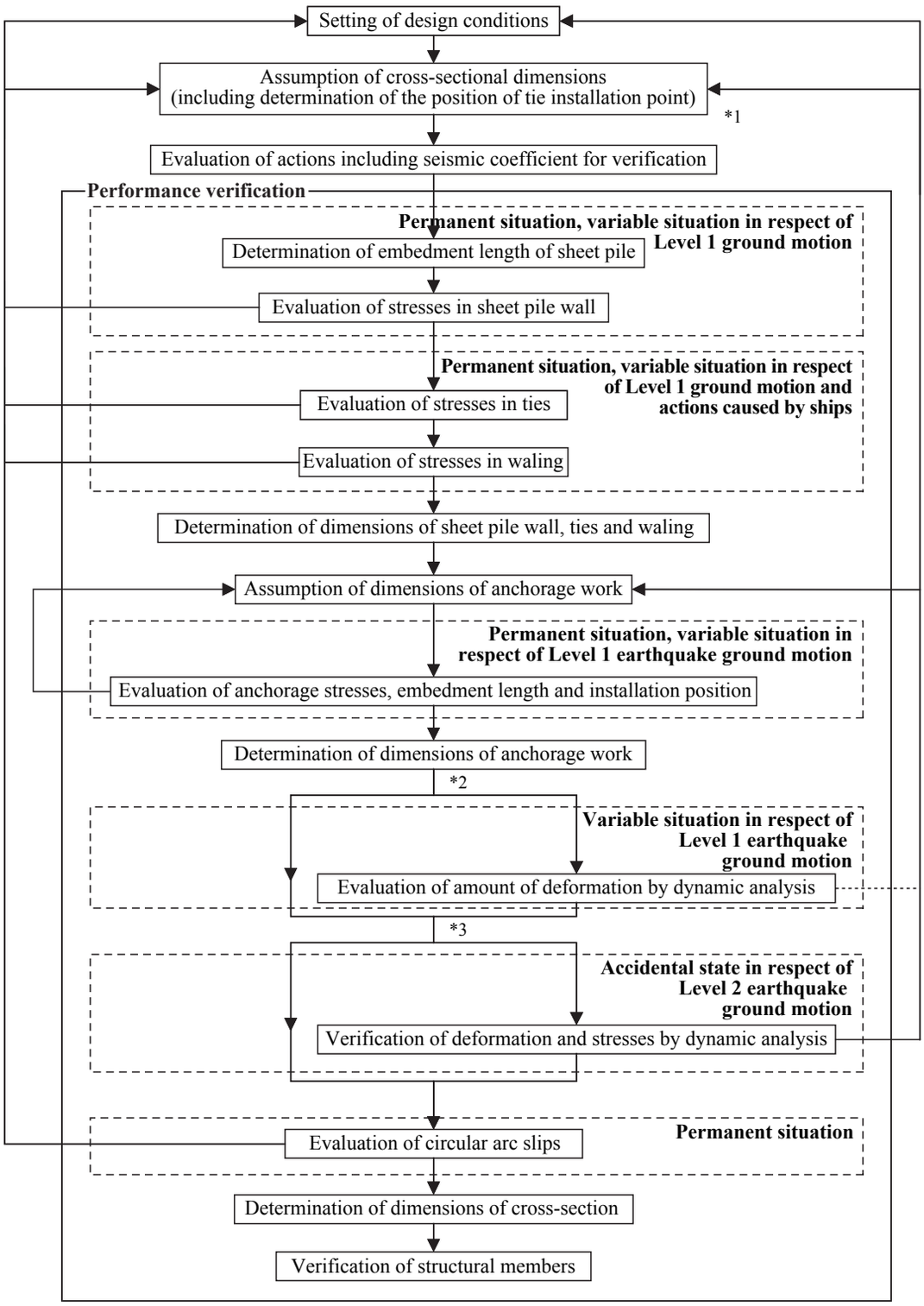

*1: Evaluation of liquefaction and settlement are not shown, so it is necessary to consider these separately.
*2: When necessary, an evaluation of the amount of deformation by dynamic analysis can be carried out for the Level 1 earthquake ground motion.
For high earthquake-resistance facilities, it is preferable that an examination of the amount of deformation be carried out by dynamic analysis.
*3: Verification in respect of Level 2 earthquake ground motion is carried out for high earthquake-resistance facilities.

Fig. 2.3.1 Example of Sequence of Performance Verification of Sheet Pile Quaywalls

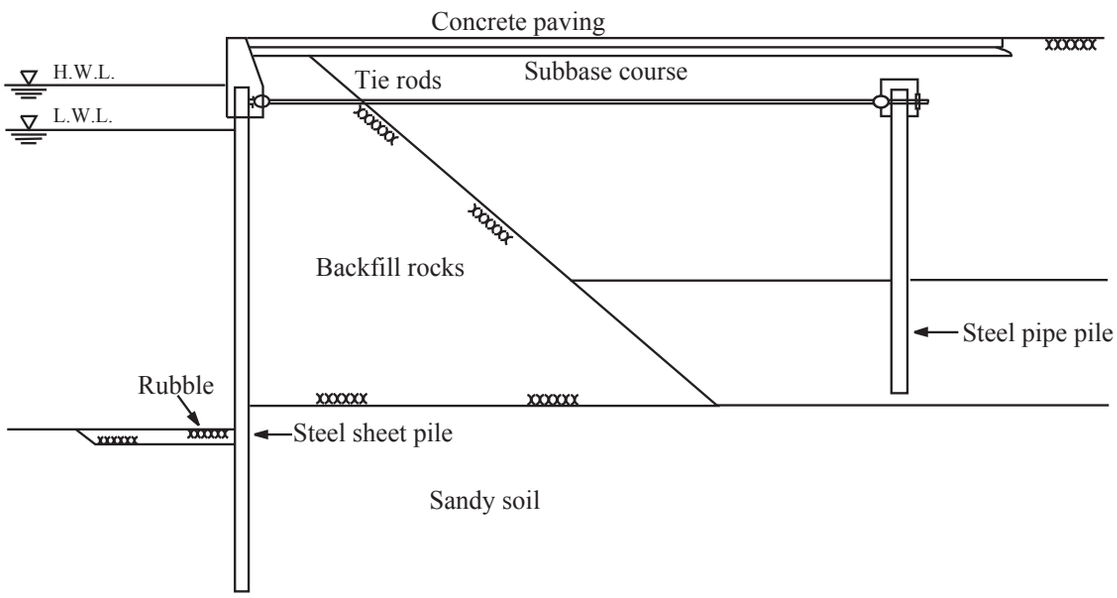

Fig. 2.3.2 Example of Cross-section of Sheet Pile Quaywall

(4) Points of Caution on Soft Ground

① The performance verification of a sheet pile wall on soft ground such as alluvial cohesive soil on soft seabed should preferably be conducted through comprehensive examination using performance verification methods shown below for tie and anchorage work, as well as other performance verification methods. Unexpected large deformation may occur in sheet piles constructed on soft ground due to lateral flows that are caused by the settlement of the ground behind the sheet pile wall. Several methods for lateral flow prediction[36)] have been proposed. Such effects should be taken into consideration in carrying out the performance verifications.

② Care should be exercised in using the performance verification methods for sheet pile quaywall described in this section, because many of these methods assume that a steel sheet pile wall is driven mainly into sandy soil ground or hard clayey soil ground. For soft ground, it is preferable to perform soil improvement work. When it is not possible to perform soil improvement work because of site conditions, it is preferable to consider using other performance verification methods, in addition to the methods described in this section, such as dynamic analysis methods which can accurately evaluate the nonlinear characteristics of soil, so that a comprehensive analysis can be made.

2.3.2 Actions

(1) The active earth pressure is normally used as the earth pressure that acts on the sheet pile wall from the backside. For the front-side reaction that acts on the embedded part of the sheet pile, it is necessary to use an appropriate value such as passive earth pressure or a subgrade reaction that corresponds to the deflection of the wall and modulus of subgrade reaction.

(2) When the free earth support method and the equivalent beam method are used in the performance verification for a sheet pile wall, it should basically be assumed that the earth pressure and residual water pressure act as shown in **Fig. 2.3.3**, and the pressure values can be calculated in accordance with **Part II, Chapter 5, 1 Earth Pressure** and **Part II, Chapter 5, 2.1 Residual Water Pressure**. The wall friction angle used for calculation of the earth pressure acting on the sheet pile wall may usually be taken at 15º for the active earth pressure and –15º for the passive earth pressure, respectively when the ground is sandy soil layer.

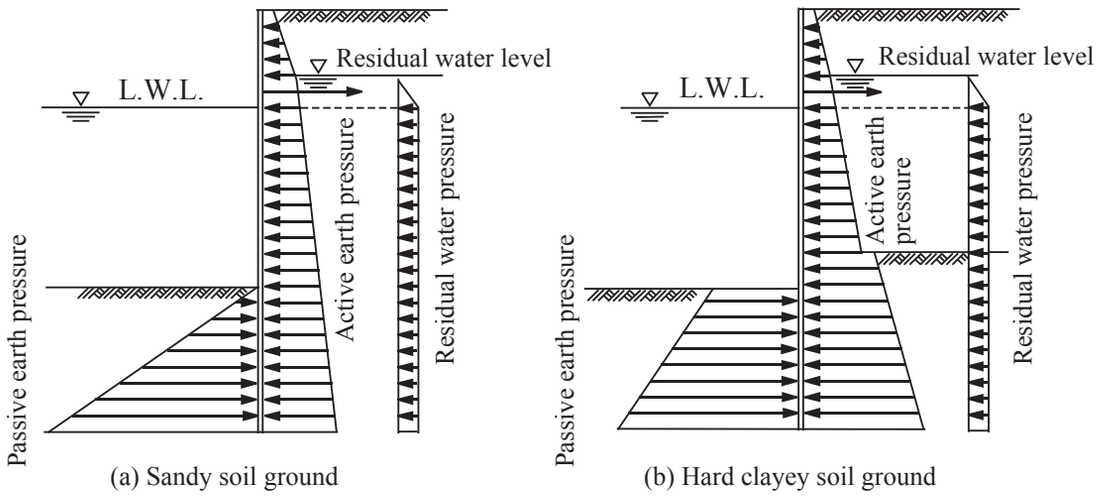

Fig. 2.3.3 Earth Pressure and Residual Water Pressure to be considered for Performance Verification of Sheet Pile Wall

(3) Since the earth pressure changes in response to displacement of the sheet pile wall, the actual earth pressure that acts on the sheet pile wall varies depending on the following:

(a) The construction method i.e., whether backfill is executed or the ground in front of the sheet piles is dredged to the required depth after the sheet piles have been driven in

(b) The lateral displacement of the sheet pile at the tie rod setting point

(c) The length of the embedded part of the sheet pile

(d) The relationship between the rigidity of the sheet pile and the characteristics of the sea bottom ground.

Therefore the earth pressure distribution is not necessary as shown in **Fig. 2.3.3.**

(4) When P. W. Rowe's method, elastic beam analysis method, is used in a sheet pile stability calculation, it is assumed that the earth pressure and residual water pressure act as shown in **Fig. 2.3.4** and a reaction earth pressure that corresponds to the modulus of subgrade reaction and the earth pressure at rest act on the front surface of the sheet pile.

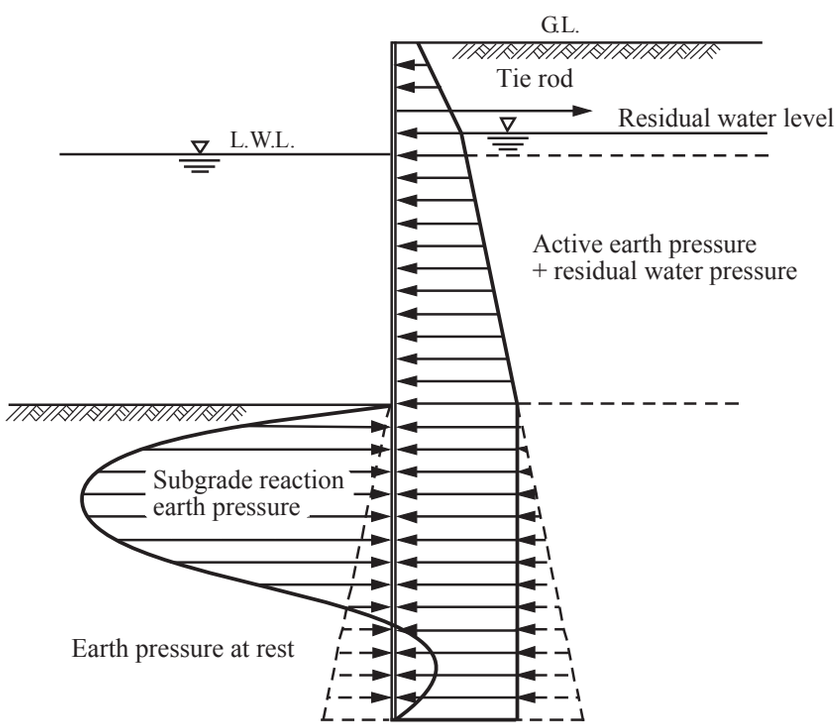

Fig. 2.3.4 Earth Pressure and Residual Water Pressure to be considered for Performance Verification of Sheet Pile Walls Using P.W. Rowe's Method

(5) When there is cargo handling equipment such as cranes on the quaywall, it is necessary to take into consideration the earth pressure due to the self weight and the live load of the equipment.

(6) In the determination of the reaction force of earth pressure that acts on the front surface of the embedded part of the sheet pile, it is necessary to assume that dredging of the sea bottom will be executed to a certain depth below the planned depth, in consideration of the accuracy of dredging work.

(7) In the case of an earth retaining wall of an open-type wharf, the sea bottom in front of the sheet pile wall has a composite shape of horizontal and sloped surfaces. In such a case, the passive earth pressure may be calculated using Coulomb's method in which the design passive earth pressure is trially calculated with several failure planes of different angles. The smallest value among them is adopted as the passive earth pressure.[41] However, it is necessary to consider the empirical evidence by experiments that the behavior of the ground in front of the sheet pile wall can be well predicted under the assumption of the ground being an elastic body.

(8) The residual water level to be used in the determination of the residual water pressure needs to be estimated appropriately in consideration of the structure of the sheet pile wall and the soil conditions. The residual water level varies depending on the characteristics of the subsoil and the conditions of sheet pile joints, but in many cases the elevation with the height equivalent to two thirds of the tidal range above the mean monthly-lowest water level (LWL) is used for sheet pile walls. In the case of a steel sheet pile wall driven into cohesive soil ground, however, care should be exercised in the determination of the residual water level, because it is sometimes nearly the same as the high water level. When sheet piles made of other materials are to be used, it is preferable to determine the residual water level based on the result of investigations of similar structures.

(9) Seismic Coefficient used in Performance Verification of Sheet Pile Quaywalls with Pile Anchorage for Variable Situation in respect of Level 1 Earthquake Ground Motion [42]

① For the performance verification of seismic-resistant of sheet piles quaywalls with pile anchorage for the variable situation in respect of Level 1 earthquake ground motion, the performance verification by direct evaluation of the amount of deformation by a detailed method such as nonlinear effective stress analysis can be carried out, but simplified methods such as the seismic coefficient method can also be used. In this case, it is necessary to use an appropriate seismic coefficient in the performance verification, taking into consideration the effects of the frequency characteristics and duration of the ground motions. A typical sequence of the seismic coefficient calculation for the verification is as shown in **Fig. 2.3.5**.

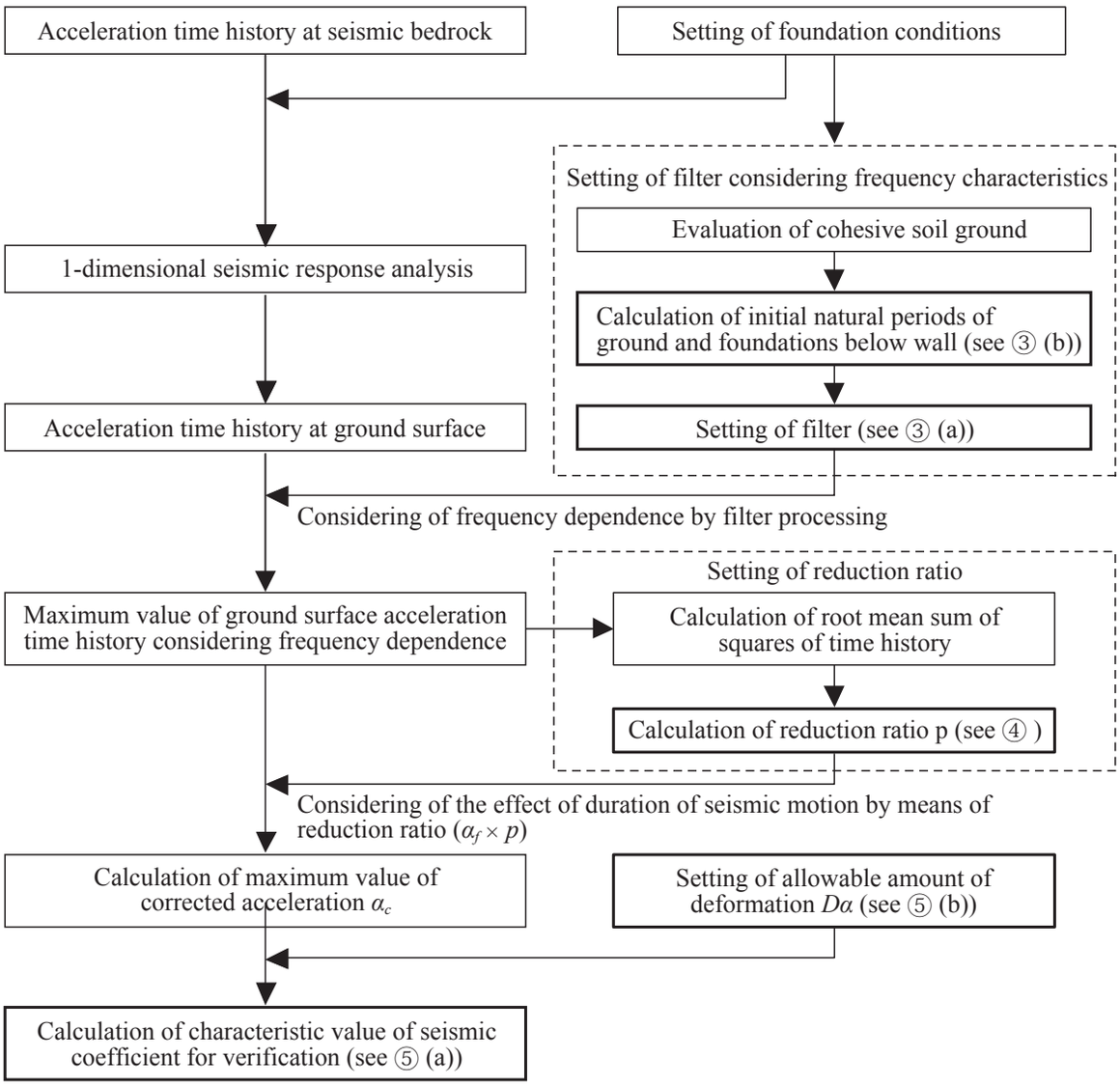

Fig. 2.3.5 Example of Sequence for Calculation of Seismic Coefficient for Verification

② It is preferable that the seismic coefficient for verification used in performance verification of sheet pile quaywalls for the variable situations in respect of Level 1 earthquake ground motion is set appropriately as a horizontal ground motion for which the amount of deformation of the sheet pile quaywall does not exceed the limit value. When Level 1 earthquake ground motion is acting, failure of sheet pile walls is preceded by deformation, and if the allowable amount of deformation of a sheet pile quaywall is about 30cm, deformation will be dominant.

③ Setting of the filter considering the frequency characteristics

(a) Setting of the filter

With the same way as for gravity-type quaywalls, the acceleration response spectrum is obtained from the Fourier transform of the acceleration time history at the ground surface obtained by 1-dimensional seismic response analysis, and this is processed with a filter considering the frequency characteristics corresponding to the deformation of the sheet pile quaywall. For this filter the value given by equation **(2.3.1)** may be used. For details refer to **2.2.2(1)⑤ Setting of filter considering frequency characteristics** in **2.2 Gravity-type Quaywalls**. An example of filter is shown in **Fig. 2.3.6**.

$$a(f)=\begin{cases} b & 0<f\le 1.0 \\ \dfrac{b}{1-\left(\dfrac{f-1.0}{1/0.34}\right)^2+11.0\left(\dfrac{f-1.0}{1/0.34}\right)\mathrm{i}} & 1.0<f \end{cases} \tag{2.3.1}$$

$$b=2.25\frac{H}{H_R}-0.88\frac{T_b}{T_{bR}}+0.96\frac{T_u}{T_{uR}}-0.96 \text{ (vertical pile anchorage type)}$$

$$b=2.25\frac{H}{H_R}-0.88\frac{T_b}{T_{bR}}+0.96\frac{T_u}{T_{uR}}-0.76 \text{ (coupled-pile anchorage type)}$$

where,

H : wall height (m)
H_R : standard wall height (=15m)
T_b : initial natural period of the ground (s)
T_{bR} : standard initial natural period of the ground (=0.8s)
T_u : initial natural period of the ground below the seabed surface (s)
T_{uR} : standard initial natural period of the ground below the seabed surface (=0.4s)

The value of b shall be set within the range indicated by equation **(2.3.2)**, using the wall height H of the wall body. However, regardless of the setting range indicated by equation **(2.3.2)**, in all cases the minimum value shall be 0.41.

$$\left.\begin{array}{l} 0.12H-0.78\le b\le 0.12H-0.24 \text{ (Vertical pile anchorage)} \\ 0.12H-0.78\le b\le 0.12H-0.04 \text{ (Coupled- pile anchorage)} \end{array}\right\} \tag{2.3.2}$$

However, $b\ge 0.41$

where,

H : wall height (m)

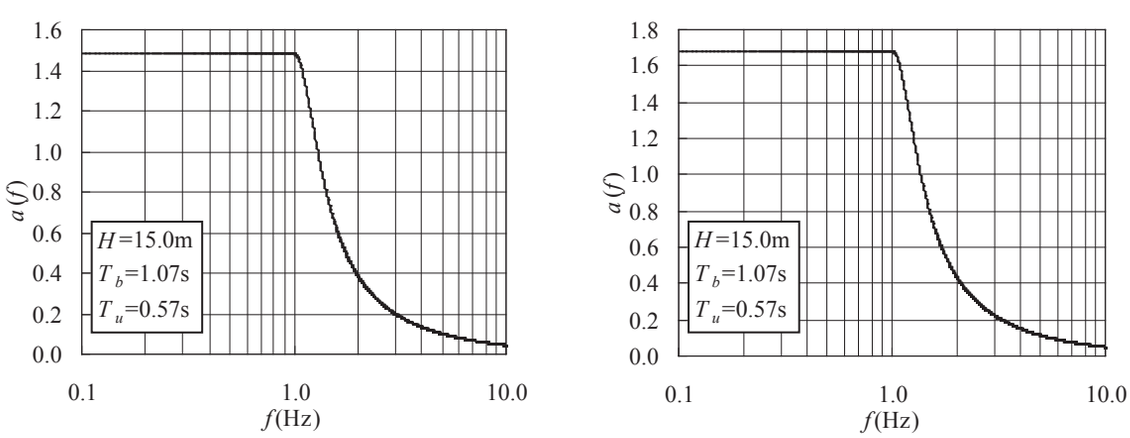

(a) Vertical pile anchorage type (b) Coupled-pile anchorage type

Fig. 2.3.6 Examples of Filters

(b) Calculation of the natural periods of the ground and the ground below the seabed surface

For calculation of the natural periods for equation **(2.3.1)**, refer to **2.2.2(1)⑤ Setting of filter considering frequency characteristics** in **2.2 Gravity-type Quaywalls**. However, the initial natural period of the ground T_b and the initial natural period of the ground below the seabed surface T_u are calculated as T_b and T_u at the positions shown in **Fig. 2.3.7**.

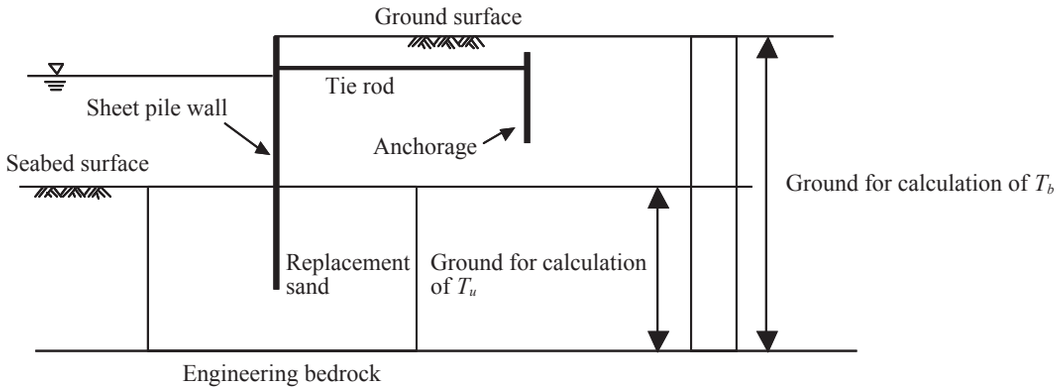

Fig. 2.3.7 Ground Subject to the Calculation of the Natural Periods

④ Setting of the reduction ratio

The reduction ratio p that takes into consideration the effect of the duration of the ground motions used in the verification of sheet pile quaywalls may be obtained from equation **(2.3.3)**. For details refer to **2.2.2(1)**⑥ **Setting of reduction** in **2.2 Gravity-type Quaywalls**.

$$\left.\begin{aligned} p &= 0.35\ln(S/\alpha_f) - 0.20 \ \text{(Vertical pile anchorage type)} \\ p &= 0.31\ln(S/\alpha_f) - 0.10 \ \text{(Coupled- pile anchorage type)} \end{aligned}\right\} \quad (2.3.3)$$

where,

p : reduction ratio ($p \leq 1.0$)
S : square root of the sum of squares of the acceleration time history after filtering (cm/s^2)
α_f : maximum value of the acceleration after filtering (cm/s^2)

⑤ Calculation of the characteristic value of the seismic coefficient for verification

(a) Characteristic value of the seismic coefficient for verification

The characteristic value of the seismic coefficient for verification k_{h_k} used in the performance verification of sheet pile quaywalls may be calculated from equation **(2.3.4)**, using the corrected maximum acceleration α_c, and the allowable amount of deformation of the top of the quaywall D_a. For the corrected maximum acceleration, refer to **2.2.2(1)**⑦ **Calculation of maximum corection acceleration** in **2.2 Gravity-type Quaywalls**.

$$k_{h_k} = 1.91\left(\frac{D_a}{D_r}\right)^{-0.69}\frac{\alpha_c}{g} + 0.03 \ \text{(vertical pile anchorage type)} \quad (2.3.4(a))$$

$$k_{h_k} = 1.32\left(\frac{D_a}{D_r}\right)^{-0.74}\frac{\alpha_c}{g} + 0.05 \ \text{(coupled pile anchorage type)} \quad (2.3.4(b))$$

where,

k_{h_k} : characteristic value of the seismic coefficient for verification
α_c : corrected value of the maximum acceleration of the ground at the ground surface (cm/s^2)
g : gravitational acceleration (=980cm/s^2)
D_a : allowable amount of deformation at the top of the quaywall (=15cm)
D_r : standard deformation amount (=10cm)

(b) Setting of the allowable amount of deformation

It is necessary to appropriately set the allowable amount of deformation for a facility, in accordance with the function required of the facility and the circumstances in which the facility is placed. The allowable value of the standard deformation amount of a sheet pile quaywall in Level 1 earthquake ground motion may be taken to be D_a=15cm. This allowable value of the standard deformation amount (D_a=15cm) is the average value of the amount of residual deformation of the existing sheet pile quaywalls in Level 1 earthquake ground motion, calculated by seismic response analysis.

⑥ The calculation of the characteristic value of the seismic coefficient for verification for sheet pile anchorage type and concrete wall anchorage type sheet pile quaywalls may apply that of vertical pile anchorage type sheet pile quaywalls.

(10) The seismic coefficient for verification of superstructure of sheet pile for the accidental situation in respect of the Level 2 earthquake ground motion may be conveniently calculated using the method in (10) above, using the acceleration time history of the ground surface at the free ground part. In this case, the allowable amount of deformation D_a may be taken to be 50cm. When this method is used, the upper bound value shall be 0.25, and a value equal to or greater than the seismic coefficient for the verification of Level 1 earthquake ground motion must be used. However, if the seismic coefficient for the verification of Level 1 earthquake ground motion exceeds 0.25, that value shall be used. For the verification of the superstructure of the anchorage for the accidental situations in respect of Level 2 earthquake ground motion, the tie tension forces obtained by a dynamic analysis may be used.

(11) For the dynamic water pressure acting during an earthquake, refer to **Part II, Chapter 5, 2.2 Dynamic Water Pressure**.

(12) For the tractive forces of ships, refer to **Part II, Chapter 8, 2.3 Actions Caused by Ship Motions**, and **Part II, Chapter 8, 2.4 Actions due to Traction by Ships**.

(13) The fender reaction force is generally considered for the performance verification of the coping. The tractive force of ship is not considered when the foundation for bollards is to be constructed separately from the coping. However, when bollards are to be installed on the coping of the sheet pile wall, it is necessary to consider the tractive force of ship in the performance verification of the coping, tie rod and wale.

2.3.3 Setting of Cross-sectional Dimensions

(1) Position of Installation of Tie Members

① The cross sections of sheet pile and tie member will be largely influenced by the position of the tie member installation. The position of the tie member installation should be determined considering the difficulty of the work of tie member attachments and the costs.

② When the wall height of a sheet pile wall is high, tie rods may be provided at two levels to support the wall structure at two points, to reduce the flexural moments in the wall structure.

(2) Selection of the structural type of anchorage work

The structural types of anchorage works are generally broadly classified as vertical pile anchorage, coupled-pile anchorage, sheet pile anchorage, and slab anchorage. The economy, construction time, and construction method differ depending on the structural type, so it is necessary to determine the structural type, considering the elevation of the ground and other site conditions before construction.

2.3.4 Performance Verification

(1) Fundamentals of Performance Verification of Sheet Pile Walls

① General

When verification for variable situation in respect of Level 1 earthquake ground motion is carried out using a simplified method such as the seismic coefficient method, the following (2) – (4) may be used. In the verification of the embedment length of the sheet pile wall, it is assumed that the embedded bottom end is fixed in the ground. Also, for verification of stresses in the sheet pile wall, it is assumed that the point of intersection between the sheet pile wall and the seabed surface is fixed in the ground. However, these assumptions used in the simplified methods are not necessarily consistent with the actual mechanisms, so when these methods are adopted, it is necessary to pay attention to this.[43] If a detailed method such as dynamic analysis is used, **(10) Verification of Ground Motion by Dynamic Analysis Methods** can be referred.

② Consideration of the effect of the rigidity of the sheet pile wall cross-section

(a) The cross-section of the sheet pile shall be set appropriately considering of the cross-sectional rigidity of the sheet pile.

(b) The behavior of sheet pile wall with the anchorage work is strongly affected by the rigidity and embedded length of the sheet piles and the characteristics of the ground. In particular, the rigidity of the sheet piles strongly affects the determination of the embedded length. Therefore it is essential to consider the effect of the cross-sectional rigidity of the sheet pile in the final selection of the cross-section.

(c) The analysis method described below, which is a modified Rowe's method, examines the embedded part of sheet piles as a beam set on an elastic bed.

Elastic beam analysis method of sheet piles

This elastic beam analysis method is applied to the sheet pile wall as the theoretical equation for beams on elastic bed by introducing an elastic coefficient of subgrade reaction for the ground into which the sheet pile

wall is driven. The basic equation for the embedded part is as equation **(2.3.5)**:

$$EI(d^4y/dx^4) = p(x) = p_{A_0} - (\ell_h/D)xy \tag{2.3.5}$$

where

E : Young's modulus of sheet pile (MN/m2)
I : geometrical moment of inertia of sheet pile wall per unit width (m4/m)
p_{A_0} : load intensity at the sea bottom generated by the active earth pressure and residual water pressure (MN/m2)
ℓ_h : modulus of subgrade reaction to the sheet pile wall (MN/m3)
D : embedded length of sheet pile (m)

As there is no general solution to a differential equation of this form, a special technique is required to solve equation (**2.3.5**). Broms and Rowe proposed a method to obtain the coefficient of each term in a numerical analysis by assuming a power series as the solution. Based on Rowe's method,[46] Takahashi and Ishiguro have published details of a method to derive a solution of the deflection curve equation of sheet pile wall and a computer-based numerical calculation method.[47] Takahashi and Kikuchi have amended this method to better reflect the behavioral characteristics of actual sheet pile walls as follows (see **Fig. 2.3.8**):

$$EI(d^4y/dx^4) = p(x) = p_{A_0} + K_{AD}\gamma x - K_0\gamma x - \left\{\ell_h/\left(D_F r_f\right)\right\}xy \tag{2.3.6}$$

where

E : Young's modulus of sheet pile (MN/m2)
I : geometrical moment of inertia of sheet pile wall per unit width (m4/m)
p_{A_0} : load intensity at the sea bottom generated by the active earth pressure and residual water pressure (MN/m2)
K_{AD} : coefficient of active earth pressure in the embedded part of the sheet pile wall
γ : unit weight of soil (MN/m3)
K_0 : coefficient of earth pressure at rest
D_F : converged embedded length of sheet pile wall (m)
r_f : ratio of the exerting depth of the primary positive reaction earth pressure acting on the front surface of the embedded part of the sheet pile to D_F

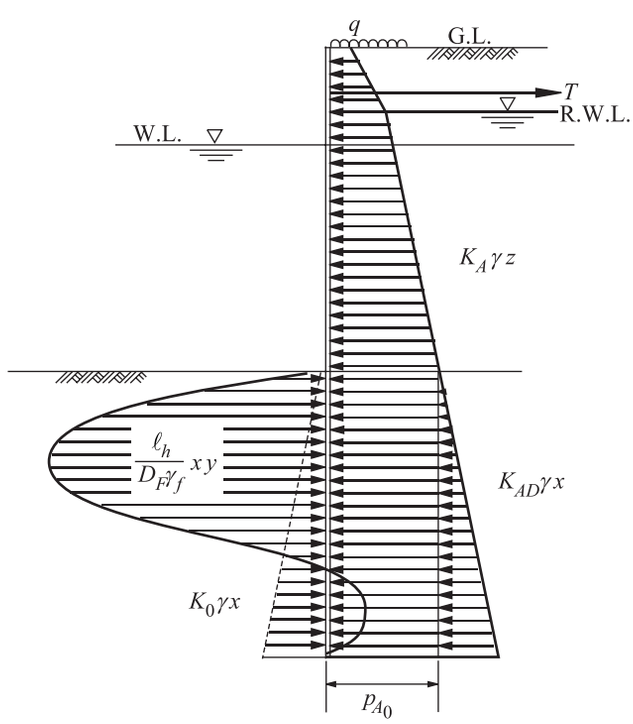

Fig. 2.3.8 Earth Pressure Distribution for the Analysis of Sheet Pile Wall

(2) Embedment length of sheet pile walls for permanent situations and variable situations in respect of Level 1 earthquake ground motion

① The mechanical behavior of the sheet pile wall varies depending on the embedment length. With a short embedment length the behavior characteristics are free earth support conditions, and with a long embedment length the behavior characteristics are fixed earth support conditions. In order to ensure stability of the sheet pile wall under permanent situations and variable situations, It is preferable that the bottom of the sheet pile is fixed sufficiently in the ground, in other words that fixed earth support conditions be satisfied. Conventionally, the embedment length was obtained by the free earth support method based on classical earth pressure theory. Takahashi and Kikuchi [49] showed that the embedment length obtained with this method by considering appropriate partial factors is considered to be fixed earth support condition. Also, the equivalent beam method for obtaining the cross-section of sheet piles assumes fixed earth support conditions.

② If the embedment length of sheet piles is to obtain by the free earth support method, analysis of the embedment length of the sheet pile wall can be carried out using the following equation. This equation is obtained from the equilibrium of moments of the earth pressure and residual water pressure about the point of installation of the ties, as shown in **Fig. 2.3.3**. In the following equation, the symbol γ is the partial factor corresponding to its subscript, where the subscripts k and d indicate the characteristic value and the design value, respectively.

$$aP_{p_d} \geq \gamma_a (bP_{a_d} + cP_{w_d} + dP_{dw_d}) \tag{2.3.7}$$

where,

P_p : resultant passive earth pressure acting on the sheet pile wall (kN/m)
P_a : resultant active earth pressure acting on the sheet pile wall (kN/m)
P_w : resultant residual water pressure acting on the wall structure (kN/m)
P_{dw} : resultant active water pressure acting on the wall body (kN/m) (only during earthquakes)
a–d : distance between the position of installation of the tie rod and the point of action of the resultant force (m)
γ_a : structural analysis coefficient

In calculating the design values of earth pressure in the equation, the tangent of the angle of shearing resistance tanϕ, the cohesion c, the wall surface friction angle δ, the effective unit weight w', the surcharge q, and the seismic coefficient for verification during earthquakes only k_h may be calculated using equation **(2.3.8)**, and **Part II, Chapter 5, 1 Earth Pressure** may be used for reference. The design value of residual water pressure may be calculated as appropriate by reference to **Part II, Chapter 5, 2.1 Residual Water Pressure**, after calculating the design value of residual water level from equation **(2.3.8)**, taking the tide level and tidal difference at the front surface into consideration. Also, the design value of dynamic water pressure used in the performance verification during an earthquake may be calculated as appropriate by reference to **Part II, Chapter 5, 2.2 Dynamic Water Pressure**, after first calculating the design value of seismic coefficient for verification from equation **(2.3.8)**. The partial coefficients used in calculation of the design values may be obtained by reference to **Table 2.3.3**.

$$\begin{aligned} &\tan\phi_d = \gamma_{\tan\phi} \tan\phi_k && c_d = \gamma_c c_k && \delta_d = \gamma_\delta \delta_k \\ &q_d = \gamma_q q_k && w_d = \gamma_w w_k && k_{h_d} = \gamma_{k_h} k_{h_k} \\ &\mathrm{RWL}_d = \gamma_{\mathrm{RWL}} \mathrm{RWL}_k \end{aligned} \tag{2.3.8}$$

③ In cohesive soil ground, normally if equation **(2.3.9)** is not satisfied, stability of embedment is not ensured.

$$4c_d > q_d + \sum w_{i_d} + \rho_w g h_w \tag{2.3.9}$$

where,

c : cohesion of the soil at the seabed (kN/m^2)
q : surcharge (kN/m^2)
w_i : weight of the soil of the ith stratum above the seabed surface, for below the residual water level, the weight in water (kN/m^2)
ρ_w : density of seawater (t/m^3)
g : gravitational acceleration (m/s^2)
h_w : difference in water level between the residual water level and the front surface tide level (m)

The design values in the equation may be calculated from the following equation.

$$c_d = \gamma_c c_k \qquad q_d = \gamma_q q_k \qquad w_{i_d} = \gamma_{w_i} w_{i_k} \tag{2.3.10}$$

When equation **(2.3.9)** is not satisfied because the soils at the seabed are weak, then either the seabed soils should be improved by an appropriate method, or a structure such as a sheet pile wall with a relieving platform should be adopted.

④ Characteristic embedment length considering the rigidity of the sheet pile wall cross-section

(a) According to the elastic beam analysis method described in (1) ④ above, the behavior characteristics of a sheet pile wall can vary depending on the embedment length. In other words, if the sheet piling is not longer by a certain value, the sheet pile wall will not be stable. The embedment length that brings about the limiting stability state is called the limiting embedment length D_C. If the embedment length is longer than the limiting embedment length, the flexural moment in the sheet pile wall becomes the peak maximum flexural moment M_P under free earth support conditions. The embedment length obtained above is called the transition embedment length D_P. If the embedment length is increased further, the flexural moment becomes the convergent maximum moment M_F under fixed earth support conditions. The minimum embedment length at which this is achieved is called the convergent embedment length D_F.

(b) Flexibility number of the sheet pile
As a measure to indicate the rigidity of a sheet pile wall as a structure, the following flexibility number in the equation **(2.3.11)** proposed by Rowe is used:

$$\rho = H^4 / EI \tag{2.3.11}$$

where
ρ : flexibility number (m^3/MN)
H : total length of sheet pile (m)
E : Young's modulus of the sheet pile (MN/m^2)
I : geometrical moment of inertia per unit width of the cross-section of the sheet pile (m^4/m)

For H in $\rho=H^4/EI$, Rowe uses the sum of total height of the sheet pile wall from the sea bottom to the top of the sheet pile wall H and the embedded length D of fixed earth support state as the total length of sheet pile. Also, Takahashi and Kikuchi Et al. suggest a new index called the similarity number that is derived by using the flexibility number and ground characteristics. The height H_T from the sea bottom to the tie rod installation point is used for the length H in this equation:

$$\omega = \rho \ell_h = (H_T{}^4 / EI)\ell_h \tag{2.3.12}$$

where,
ω : similarity number
ρ : flexibility number (m^3/MN)
ℓ_h : modulus of subgrade reaction of the sheet pile wall (MN/m^3)
H_T : height from the tie installation point to the seabed surface (m)
E : Young's modulus of the sheet pile (MN/m^2)
I : geometrical moment of inertia per unit width of the cross-section of the sheet pile (m^4/m)

By expressing the mechanical characteristics of a sheet pile wall with a similarity number, the effect of the rigidity of the sheet piles can be estimated quantitatively.

(c) Modulus of subgrade reaction of sheet piles
There are a very few reference data that gives measured or suggested values of modulus of subgrade reaction of the sheet pile ℓ_h. Therefore it is preferable to obtain these values by means of model tests and/or field measurements. The proposed values that have traditionally been used include the values proposed by Terzaghi and the ones proposed by Takahashi and Kikuchi, et al., which have been obtained by modifying Terzaghi's values. The research conducted by Takahashi and Kikuchi, et al. shows that the effect of errors in the modulus of subgrade reaction is not fatal for practical use.[49] Thus the values proposed by Takahashi and Kikuchi, et al. may normally be used as the coefficient of subgrade reaction of sheet pile wall.

1) Values proposed by Terzaghi [51]
The values proposed by Terzaghi are as listed in **Table 2.3.1**.

Table 2.3.1 Modulus of Subgrade Reaction for Sheet Pile Wall in Sandy Ground (ℓ_h) (MN/m^3)

Relative density of sand	Loose	Medium	Dense
Modulus of subgrade reaction (ℓh)	24	38	58

2) Values proposed by Takahashi and Kikuchi, et al.[49]
Takahashi and Kikuchi, et al. confirmed that the result of Tschebotarioff's model test of sheet pile wall [52] does not contradict with the values proposed by Terzaghi. They related the modulus of subgrade reaction listed in **Table 2.3.1** with the *N*-value, using the relationship between the modulus of subgrade reaction and the relative density proposed by Terzaghi as well as the relationship between the *N*-value and the relative density [53] also demonstrated by Terzaghi. Then they adopted the smaller value of modulus of subgrade reaction to be on the safe side and connected the resultant values using a smooth line as shown in **Fig. 2.3.9.** They also related the modulus of subgrade reaction with the angle of shearing resistance as shown in **Fig. 2.3.10**, using one equation (**2.3.13**) of Dunham's equations for calculating the smaller angle of shearing resistance for a given *N*-value.

$$\phi = \sqrt{12N} + 15 \tag{2.3.13}$$

where,
ϕ : angle of shearing resistance (°)
N : *N*-value

However, it should be noted that **Fig. 2.3.10** is an expedient graph to a certain degree, as Dunham's equations include cases that give the larger angle of shearing resistance depending on the grain size of sandy soil.

Fig. 2.3.9 and **2.3.10** also show the values proposed by Terzaghi in addition to the values proposed by Takahashi and Kikuchi, at al.

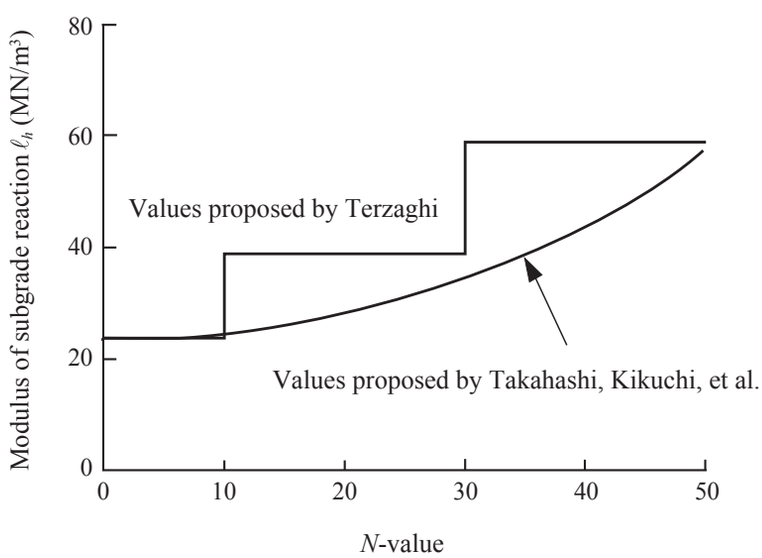

Fig. 2.3.9 Relationship between Modulus of Subgrade Reaction (ℓ_h) and *N*-value

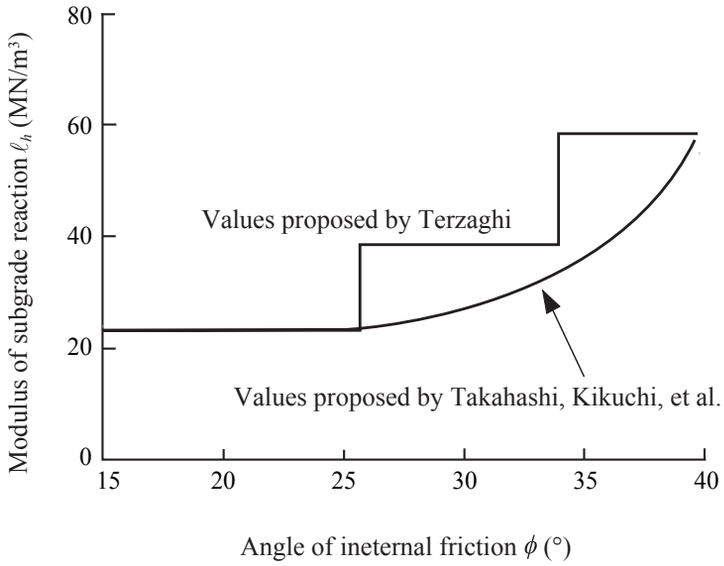

Fig. 2.3.10 Relationship between Modulus of Subgrade Reaction (ℓ_h) and Angle of Internal Friction (ϕ)

(d) Determination of the embedded length of sheet pile using Rowe's method

In the determination of the embedded length of sheet piles using Rowe's method, a characteristic value that satisfies equation (**2.3.14**) can be used. As equation **(2.3.14)** takes into consideration the stiffness of the sheet pile without the earth pressure, when reducing the earth pressure of the existing steel sheet pile quaywall or similar improvement method, it is necessary to be aware that the earth pressure reduction effect does not necessarily result in a shortening of the embedment length. Therefore, when considering the earth pressure reduction effect, it is preferable to also use the methods of ① to ④ above.

$$\delta_s = D_F / H_T \geq 5.0916\omega^{-0.2} - 0.2591 \tag{2.3.14}$$

where

δ_s : ratio of the embedded length of sheet pile to the height of the tie rod installation point above the sea bottom

D_F : embedded length of sheet pile (m)

H_T : height of the tie rod installation point above the sea bottom (m)

ω : similarity number ($=\rho\ell_h$)

ρ : flexibility number ($=H_T^4/EI$) (m³/MN)

E : Young's modulus of sheet pile (MN/m²)

I : geometrical moment of inertia of sheet pile wall per unit width (m⁴/m)

ℓ_h : modulus of subgrade reaction to sheet pile wall (MN/m³)

The embedded length calculated with this equation is the converged embedded length. According to the study conducted by Takahashi and Kikuchi, et al. an increase of just a 2%–plus in the maximum flexural moment occurs when an embedded length corresponding to 70% of the converged embedded length is employed. Therefore the use of the converged embedded length as the design embedded length secures the safety, and there is no need to consider a margin against the safety.

Equation **(2.3.14)** formulates the relationship between the ratio of the convergent embedment length D_F to the virtual wall height H_T, $\delta=(D_F/H_T)$, and the similarity number ω shown in **Fig. 2.3.11**. This is based on analysis carried out by Takahashi and Kikuchi, at al. using a simulation model for 72 cases with a combination of conditions for water depth of the quay (–4 to –14m), soil conditions, seismic conditions (k_h=0.2), and material conditions of the steel sheet piles. In **Fig. 2.3.11**, δ for permanent situations and earthquake conditions are obtained as δ_N and δ_S respectively, but in equation **(2.3.14)** δ_S is used for the action of earthquakes because it indicates large values.

Also, in this analysis by Takahashi and Kikuchi, et al. the relationship between the similarity number, the ratio μ ($=M_F/M_T$), and the ratio τ ($=T_F/T_T$) were studied. The ratio μ is the ratio of the maximum flexural moment M_F when there is convergent embedment length D_F in the bending curve analysis to the maximum flexural moment M_T calculated by the equivalent beam method assuming the tie installation point and the seabed surface as the support points. The ratio τ is the ratio of tie tension force T_F when there is convergent

embedment length D_F in the bending curve analysis to the tie tension force T_T calculated from the virtual beam method. These relationships are shown in **Figs. 2.3.12** to **2.3.13**.

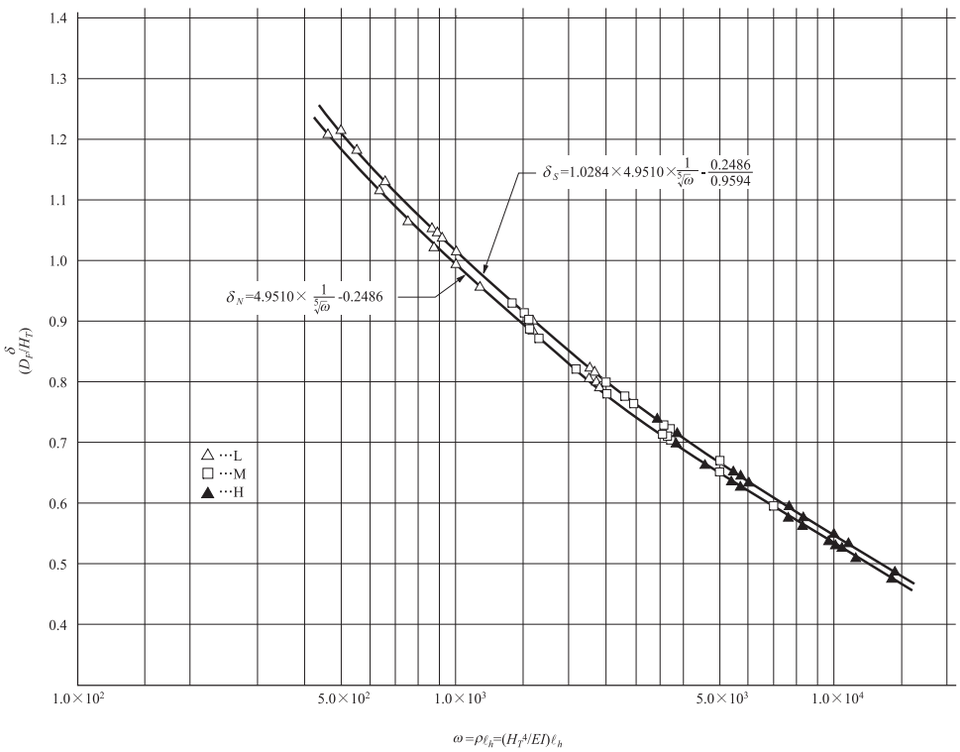

Fig. 2.3.11 Relationship between ω and δ

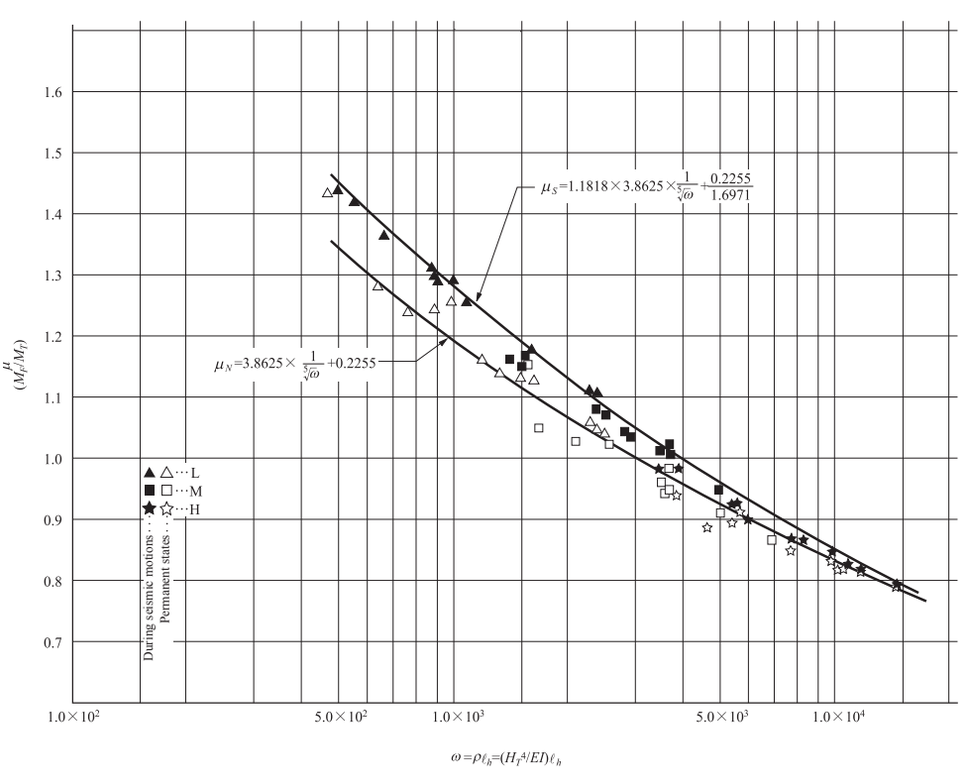

Fig. 2.3.12 Relationship between μ and ω

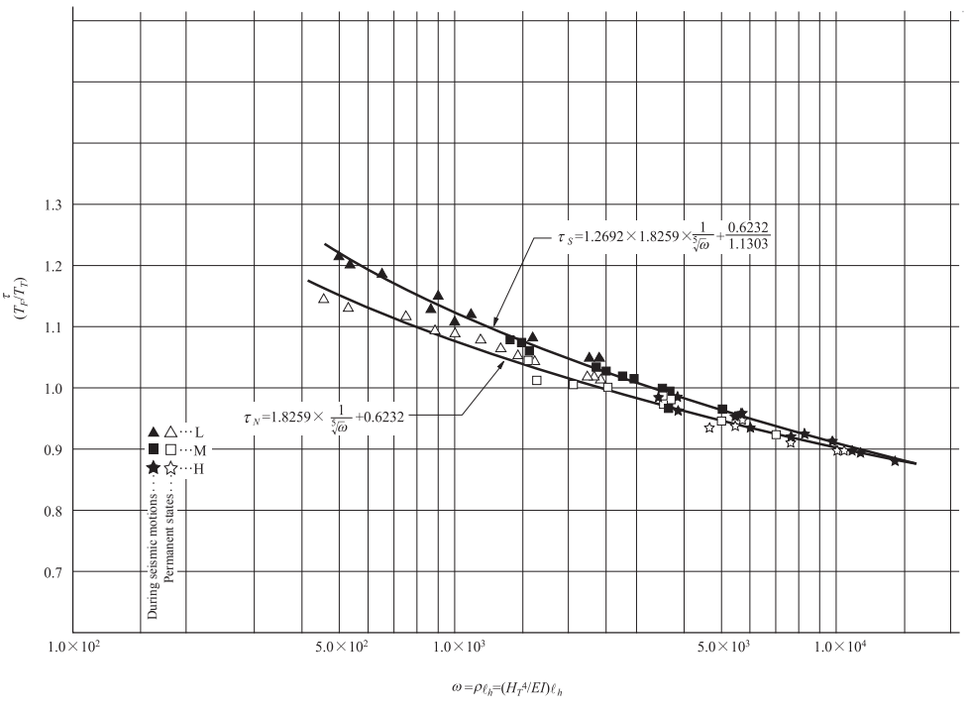

Fig. 2.3.13 Relationship between τ and ω

(3) Flexural Moment of Sheet Piles and Reaction at Tie Member Installation Point

① The maximum flexural moment of sheet piles and reaction at the tie member installation point shall be calculated with an appropriate method that takes into consideration the rigidity and embedded length of the sheet piles and the characteristics of the ground.

② The maximum flexural moment and reaction force at the tie member installation point of sheet piles may be determined using the equivalent beam method described below or Rowe's method. However, care should be exercised when using the equivalent beam method, because the section forces may be under estimated when the rigidity of the sheet piles is high.

③ Equivalent Beam Method

The equivalent beam method calculates the maximum flexural moment and reaction force at the tie member installation point of the sheet piles by assuming a simple beam supported at the tie member installation point and the sea bottom with the earth pressure and residual water pressure acting as the load above the sea bottom (see **Fig. 2.3.14**).

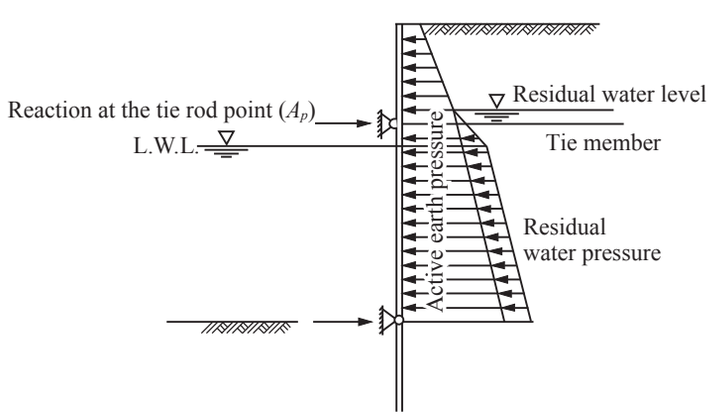

Fig. 2.3.14 Equivalent Beam for Obtaining Flexural Moment

④ The seabed surface used in calculating the flexural moment should take margin of the depth into consideration.

⑤ The design values of maximum flexural moment in the sheet pile wall and the reaction force at the tie member installation point can normally be calculated using the following equation. In the following equation, the subscript *d* indicates the design value.

(a) Reaction force at the tie installation point

$$A_{p_d} = P_{a_d} + P_{w_d} + P_{dw_d} - \frac{(aP_{a_d} + bP_{w_d} + cP_{dw_d})}{L} \tag{2.3.15}$$

where,

A_p : reaction force at the tie installation point (kN/m)
P_a : resultant active earth pressure from the top of the sheet piling to the seabed surface (kN/m)
P_w : resultant residual water pressure from the top of the sheet piling to the seabed surface (kN/m)
P_{dw} : resultant dynamic water pressure acting on the sheet pile wall (kN/m) (only during earthquakes)
a–c : distance from the installation position of the tie member to the point of action of the resultant force (m)
L : distance from the installation position of the tie member to the seabed surface (m)

(b) Maximum flexural moment

$$M_{\max_d} = aA_{p_d} - bP'_{a_d} - cP'_{w_d} - dP'_{dw_d} \tag{2.3.16}$$

where,

A_p : reaction at the tie installation point (kN/m)
P'_a : resultant active earth pressure from the top of the sheet pile to the position where the shear force S becomes 0 (kN/m)
P'_w : resultant residual water pressure from the top of the sheet pile to the position where the shear force S becomes 0 (kN/m)
P'_{dw} : resultant dynamic water pressure from the top of the sheet pile to the position where the shear force S becomes 0 (kN/m) (during an earthquake only)
a : distance from the position where the shear force S becomes 0 to the tie member installation position (m)
b–d : distance from the position where the shear force S becomes 0 to the point of action of the resultant force (m)

The design values of earth pressure, residual water pressure, and resultant dynamic water pressure force may be appropriately calculated by reference to **Part II, Chapter 5, 1 Earth Pressure**. **Part II, Chapter 5, 2.1 Residual Water Pressure**, and **Part II, Chapter 5, 2.2 Dynamic Water Pressure**, after calculating the design values of the tangent of the angle of shearing resistance tanϕ, the cohesion c, the wall surface friction angle δ, the effective unit weight w', the surcharge q, the seismic coefficient for verification during earthquakes only k_h, and the residual water level RWL, from equation **(2.3.8)**.

⑥ When the maximum flexural moment of sheet piles and the tie member installation point reaction force are to be determined taking the effects of the modulus of subgrade reaction and the rigidity of the sheet piles into consideration, the following method can be used. The maximum flexural moment and reaction force are calculated by using the equivalent beam method and the correction factors obtained from **Figs. 2.3.12** and **2.3.13** are multiplied by those values. The seismic coefficient for performance verification purposes shown in **Figs. 2.3.12** and **2.3.13** has been set at 0.20. Values obtained from these figures may be used for the performance verification for variable situation in respect of Level 1 earthquake ground motion unless a very detailed verification is required.

(4) Verification of Stresses in the Sheet Pile Wall for Permanent Situation and Variable Situation in respect of Level 1 earthquake ground motion

① Analysis of stresses in the sheet pile wall may be carried out using the following equation. In the following equation, the symbol γ is the partial factor corresponding to its subscript, where the subscripts k and d indicate characteristic value and the design value respectively.

$$\sigma_{y_d} \geq \gamma_a \frac{M_{\max_d}}{Z} \tag{2.3.17}$$

where,

σ_y : bending yield stress of the steel material (N/mm^2)
$M_{\max}$: maximum flexural moment in the sheet pile wall (N mm/m)
Z : section modulus of the steel material (mm^3/m)
γ_a : structural analysis factor (see **Table 2.3.3**)

Equation **(2.3.18)** may be used for calculating the design values of bending yield stress of the steel material in the equation. For the design value of the maximum flexural moment in the sheet pile wall, refer to **(3) Flexural Moment of Sheet Piles and Reaction at Tie Member Installation Point**.

$$\sigma_{y_d} = \gamma_{\sigma_y} \sigma_{y_k} \tag{2.3.18}$$

② The joint length of steel sheet piles should be as long as possible, from the point of view of maintaining the integrity of the sheet piles. However, taking into consideration damage to the joints during construction, the joints do not normally extend to the bottoms of the sheet piles. Normally the bottom end of the joint is at the depth where the active earth pressure strength and the passive earth pressure strength are equal, or is continuous to the virtual fixity point ($1/\beta$, refer to the virtual fixing point shown in **Chapter 5, 5.2.2 Setting of Basic Cross-section**), and is frequently 2–3m below the seabed surface. If the residual water level difference is large, the joint length of steel sheet piles should be determined taking the piping phenomenon into account. The top end of the joint is often extended up to 30–40cm above the bottom surface of the superstructure.

③ When U-shaped Steel sheet pile is subjected to bending, there is a possibility that vertical slip occur at joints which locate at the center of the wall. In this case, the U-shaped steel sheet piles will not act integrally with the adjacent sheet piles. In this situation the section modulus and the geometrical moment of inertia of the cross-section calculated assuming the steel sheet piles act integrally in the wall may not be obtained. Methods for evaluating the effect of this slip in the joints include the method of reducing the cross-section performance by multiplying by a joint efficiency coefficient.[55), 56)]

(5) Verification of Stresses in the Tie Members under Permanent Situation and Variable Situations in respect of Level 1 earthquake ground motion

① Analysis of stresses in the tie members may be carried out using the following equation. In the following equation, the subscript *d* indicates the design value.

$$\sigma_{y_d} \geq \gamma_a \frac{T_d}{A} \tag{2.3.19}$$

where,

σ_y : yield stress in tension in the tie member (N/mm^2)
T_d : tension force in tie member (N)
A : cross-sectional area of tie member (mm^2)
γ_a : structural analysis factor

Equation **(2.3.18)** may be used for calculating the design value of tensile yield stress of the tie member in the equation. For the design value of the tension force in the tie member, refer to ② **Tension force of tie member**, below.

② Tension force of tie member

(a) The tension acting on a tie member can be calculated based on the reaction at tie installation point calculated in accordance with **(3) Flexural Moment of Sheet Pile and Reaction at Tie Member Installation Point** above. In this case, the reaction at tie member installation point should be calculated by taking the rigidity of the sheet pile wall cross section into consideration. Take note that the tie member tension force that is calculated in accordance with **(3) Flexural Moment of Sheet Pile and Reaction at Tie Member Installation Point** above is the tension force per meter of quaywall length. Tie members are usually installed at fixed intervals, and in some cases, tie members may be attached at a certain angle with the line perpendicular to the sheet pile wall to avoid the existing structure located behind the wall. Therefore, it is necessary to calculate the tie member tension force considering these site conditions.

(b) The tension force that acts on a tie member is generally calculated by equation (**2.3.20**). In the equation below, subscript *d* stands for the design value.

$$T_d = A_{p_d} \ell \sec\theta \tag{2.3.20}$$

where

T : tension force of tie member (kN)

A_p : reaction at the tie member installation point (kN/m)
ℓ : tie member installation interval (m)
θ : inclination angle of tie member to the line perpendicular to the sheet pile wall (°)

(c) In some cases, bollards are installed on the coping of a sheet pile wall and the tractive forces of ships acting on the bollards are transmitted to the tie members. Usually, the coping is assumed to be a beam with the tie members as elastic supports and the tie member tension force may be calculated using equation (**2.3.21**), assuming that the tractive force is evenly shared by four tie members near a bollard. In the equation below, subscript *d* stands for the design value.

$$T_d = \left(A_{p_d} \ell + \frac{P_d}{4} \right) \sec\theta \tag{2.3.21}$$

where
T : tension force acting in the tie member (kN)
A_p : reaction force at the installation point of the tie member (kN/m)
ℓ : spacing of installation of tie members (m)
θ : inclination angle of tie member in perpendicular to the sheet pile wall and the tie member (°)
P : horizontal component of the tractive force of ship acting on a bollard (kN)

Refer to **Part II, Chapter 8, 2.4 Actions due to Traction by Ships** for details on tractive forces of ships.

③ Tie rods

(a) For the yield stress of tie rods, refer to **Table 2.3.2**.

(b) The tensile stress in the tie rod is calculated using the cross-section from which the amount of corrosion has been deducted. For the amount of corrosion, refer to **Part II, Chapter 11, 2.3.2 Corrosion Rates of Steel**.

④ Tie wires
Instead of tie rods, so–called tie wire may be used, that is made from hardened steel wire having characteristics equivalent to hardened steel wire (JIS G 3506), or PC steel wire having characteristics equivalent to piano wire (JIS G 3502).

Table 2.3.2 Characteristics of Tie Rod Materials

Type	Rupture strength (N/mm²)	Yield stress (N/mm²)	Elongation (%)	Yield stress / rupture strength
SS400	≥ 402	(dia. 40mm or less) ≥ 235	≥ 24	0.58
		(dia. > 40mm) ≥ 215	≥ 24	0.53
SS490	≥ 490	(dia. 40mm or less) ≥ 275	≥ 21	0.56
		(dia. > 40mm) ≥ 255	≥ 21	0.52
High tensile strength steel 490	≥ 490	≥ 325	≥ 24	0.66
High tensile strength steel 590	≥ 590	≥ 390	≥ 22	0.66
High tensile strength steel 690	≥ 690	≥ 440	≥ 20	0.64
High tensile strength steel 740	≥ 740	≥ 540	≥ 18	0.73

(6) Verification of Stresses in Wale

① Analysis of stresses in waling may be carried out using the following equation. In the following equation, the subscript *d* indicates the design value. In the equation, all the partial factors except the structural analysis factor may be taken to be 1.0. The structural analysis factor may be taken to be 1.4 for the permanent situations, and 1.12 for the variable situations associated with Level 1 earthquake ground motion.

$$\sigma_{y_d} \geq \gamma_a \frac{M_{\max_d}}{Z} \tag{2.3.22}$$

where,

σ_y : bending yield stress in the waling (N/mm^2)
$M_{\max}$: maximum flexural moment in the waling (Nmm/m)
Z : section modulus of the waling (mm^3)
γ_a : structural analysis factor

Equation **(2.3.18)** may be used to calculate the design value of bending yield stress of the waling in the equation. For the calculation of the maximum flexural moment in the waling, refer to ② below.

② Various equations for calculating the maximum flexural moment of wale have been proposed. The moment, however, should be determined according to conditions at the site so that the cross section is safe and economical. In general, the maximum flexural moment of wale may be calculated using equation (**2.3.23**). In the equation below, subscript *d* stands for the design value.

$$M_{\max_d} = \frac{T_d \ell}{10} \tag{2.3.23}$$

where

$M_{\max_d}$: maximum flexural moment of wale (kN·m)
T : tension force of a tie member calculated in accordance with **(5)** ② **Tension force of tie member** (kN)
ℓ : tie rod installation interval (m)

This equation is obtained by analyzing a three–span continuous beam supported at the tie member installation points and subjected to the reaction at the tie installation point (A_p) as a uniformly distributed load.

③ When bollards are installed on the coping, it is necessary to verify the performance of the wale near one of the bollards using a tie member tension force that takes into consideration the tractive force of ship in accordance with **(5)** ② **Tension force of tie member** above. However, when the wale is embedded into the coping, the effect of the tractive force of ship may be ignored.

(7) Analysis of Slip Failure in the Ground under permanent situations

For analysis of slip failure in the ground of sheet piles quaywalls, refer to analysis of slip failure in the ground in **2.2 Gravity-type Quaywalls**. In this case, the analysis is carried out for circular slip failures passing below the bottom of the sheet pile wall. Standard values of the partial factors used in the performance verification are shown in **Table 2.3.3**.

(8) Partial Factors for permanent situations and variable situations in respect of Level 1 earthquake ground motion

① Partial factors for the standard system failure probabilities for the embedment length of sheet pile walls, sheet pile wall stresses, tie rod stresses, and circular slip failure for sheet pile quaywalls under permanent situations are shown in **Table 2.3.3(a)**. Based on the average safety level for design methods of the past, the average system reliability index for stability of wall structures is 5.6 or when converted into a failure probability 9.9×10^{-9}, the average reliability index for circular slip failure is 6.0 or when converted into a failure probability 9.2×10^{-10}. When the expected total cost expressed by the sum of the initial construction cost and the expected value of the restoration cost due to collapse is taken into consideration, the system reliability index that minimizes the expected total cost is 3.6 or when converted into a failure probability 1.7×10^{-4} for high earthquake-resistance facilities, and 2.7 or when converted into a failure probability $4.0\times10^{-}$ for other quaywalls.[358)]

Table 2.3.3 Standard Partial Factors
(a) Permanent situations (No. 1)

				High earthquake-resistance facilities				Other than High earthquake-resistance facilities			
Target system reliability index β_T				3.6				2.7			
Target system reliability index β_T				1.7×10^{-4}				4.0×10^{-3}			
				γ	γ	μ/X_k	V	γ	α	μ/X_k	V
Embedment length of sheet pile walls	Sandy soil ground	$\gamma_{\tan\phi'}$	Tangent of the angle of shearing resistance	0.65	1.000	1.00	0.100	0.75	1.000	1.000	0.100
		$\gamma_{c'}$	Cohesion	1.00	0.000	1.00	0.100	1.00	0.000	1.000	0.100
		$\gamma_{w'}$	Effective unit weight	1.00	0.000	1.00	0.050	1.00	0.000	1.000	0.050
		γ_δ	Wall surface friction angle	0.90	0.300	1.00	0.100	0.90	0.300	1.000	0.100
		γ_q	Surcharge	1.00	–	–	–	1.00	–	–	–
		γ_{RWL}	Residual water level	1.00	0.000	1.00	0.050	1.00	0.000	1.000	0.050
		γ_a	Structural analysis factor	1.00	–	–	–	1.00	–	–	–
	Cohesive soil ground	$\gamma_{\tan\phi'}$	Tangent of the angle of shearing resistance	0.70	0.820	1.00	0.100	0.80	0.820	1.000	0.100
		$\gamma_{c'}$	Cohesion	0.75	0.700	1.00	0.100	0.80	0.700	1.000	0.100
		$\gamma_{w'}$	Effective unit weight	1.05	–0.190	1.00	0.050	1.05	–0.190	1.000	0.050
		γ_δ	Wall surface friction angle	0.95	0.120	1.00	0.100	0.95	0.120	1.000	0.100
		γ_q	Surcharge	1.00	–	–	–	1.00	–	–	–
		γ_{RWL}	Residual water level	1.00	0.000	1.00	0.050	1.00	0.000	1.000	0.050
		γ_a	Structural analysis factor	1.00	–	–	–	1.00	–	–	–
Sheet pile wall stresses	Sandy soil ground	$\gamma_{\tan\phi'}$	Tangent of the angle of shearing resistance	0.75	0.760	1.00	0.100	0.85	0.760	1.000	0.100
		$\gamma_{c'}$	Cohesion	1.00	0.000	1.00	0.100	1.00	0.000	1.000	0.100
		$\gamma_{w'}$	Effective unit weight	1.05	–0.320	1.00	0.050	1.05	–0.320	1.000	0.050
		γ_δ	Wall surface friction angle	1.00	0.000	1.00	0.100	1.00	0.000	1.000	0.100
		γ_q	Surcharge	1.00	–	–	–	1.00	–	–	–
		γ_{RWL}	Residual water level	1.00	0.000	1.00	0.050	1.00	0.000	1.000	0.050
		γ_{σ_y}	SY295, SY390, SKY490	1.00	0.720	1.20	0.065	1.00	0.720	1.200	0.065
		γ_{σ_y}	SKY 400	1.00	0.720	1.26	0.073	1.00	0.720	1.260	0.073
		γ_a	Structural analysis factor	1.00	–	–	–	1.00	–	–	–
	Cohesive soil ground	$\gamma_{\tan\phi'}$	Tangent of the angle of shearing resistance	0.80	0.500	1.00	0.100	0.85	0.500	1.00	0.100
		$\gamma_{c'}$	Cohesion	1.00	0.000	1.00	0.100	1.00	0.000	1.00	0.100
		$\gamma_{w'}$	Effective unit weight	1.05	–0.250	1.00	0.050	1.05	–0.250	1.00	0.050
		γ_δ	Wall surface friction angle	1.00	0.000	1.00	0.100	1.00	0.000	1.00	0.100
		γ_q	Surcharge	1.00	–	–	–	1.00	–	–	–
		γ_{RWL}	Residual water level	1.00	0.000	1.00	0.050	1.00	0.000	1.00	0.050
		γ_{σ_y}	SY295, SY390, SKY490	0.90	1.000	1.20	0.065	1.00	1.000	1.20	0.065
		γ_{σ_y}	SKY400	0.95	1.000	1.26	0.073	1.00	1.000	1.26	0.073
		γ_a	Structural analysis factor	1.00	–	–	–	1.00	–	–	–
Stresses in tie members	Sandy soil ground	γ_{σ_y}	HT690	0.60	0.750	1.13	0.070	0.65	0.750	1.13	0.070
		γ_{σ_y}	SS400	0.65	0.750	1.26	0.073	0.70	0.750	1.26	0.073
		γ_a	Structural analysis coefficient	1.00	–	–	–	1.00	–	–	–
	Cohesive soil ground	γ_{σ_y}	HT690	0.55	0.940	1.13	0.070	0.60	0.940	1.13	0.070
		γ_{σ_y}	SS400	0.65	0.940	1.26	0.073	0.70	0.940	1.26	0.073
		γ_a	Structural analysis factor	1.00	–	–	–	1.00	–	–	–

Table 2.3.3 Standard Partial Factors
(a) Permanent situations (No. 2)

			High earthquake-resistance facilities				Other than high earthquake-resistance facilities			
			γ	α	μ/X_k	V	γ	α	μ/X_k	V
Circular slip failure	$\gamma_{c'}$	Soil strength: cohesion	0.90	0.309	1.00	0.040	0.90	0.329	1.00	0.040
	$\gamma_{\tan\phi'}$	Soil strength: tangent of the angle of shearing resistance	0.90	0.398	1.00	0.040	0.90	0.396	1.00	0.040
	γ_{w1}	Unit weight of soils above the seabed surface	1.10	–0.259	1.00	0.030	1.10	–0.271	1.00	0.030
	γ_{w2}	Unit weight of sandy soil strata below the seabed surface	0.90	0.314	1.00	0.030	0.90	0.312	1.00	0.030
	γ_{w3}	Unit weight of cohesive soil strata below the seabed surface	1.00	0.000	1.00	0.030	1.00	0.000	1.00	0.030
	γ_q	Surcharges	1.70	–0.467	1.00	0.400	1.60	–0.487	1.00	0.400
	γ_{RWL}	Residual water level	1.10	–0.040	1.00	0.050	1.10	–0.040	1.00	0.050

*1: α: sensitivity factor, μ/X_k: deviation of average value (average value / characteristic value), V: coefficient of variation.
*2: It is necessary to determine which is governing in the soil composition of the foundations under consideration, the sandy soil strata or the cohesive soil strata, and use the partial factors appropriate for sandy soil ground or cohesive soil ground. For example, if it is determined that the sandy soil strata are governing (sandy soil ground), when there is a thin stratum of cohesive soil, verification is carried out using the partial factor for the cohesion of a sandy soil ground.
*3: σ_y indicates the yield strength of the steel material, and the partial factors are selected in accordance with the type of steel used.
*4: The design value of the tension force in the tie member is calculated from the design value of tie member installation point reaction obtained from the verification of stresses in the sheet piles.
*5: The angle of shearing resistance ϕ' when calculating earth pressure is obtained from $\phi'=\arctan(\gamma_{\tan\phi'}\cdot\tan\phi'_k)$.
*6: For applying the partial factors to circular slip failure, refer to the points of caution given in **Chapter 2, 3 Slope Stability, 3.1(7) Partial Factors.**

Table 2.3.3 Standard Partial Factors
(b) Variable situations in respect of Level 1 earthquake ground motion

				All facilities			
Performance requirement				Serviceability			
				γ	α	μ/X_k	V
Embedment length of sheet piled walls	Sandy soil ground	$\gamma_{\tan\phi'}$	Tangent of the angle of shearing resistance	1.00	–	–	–
		$\gamma_{c'}$	Cohesion	1.00	–	–	–
		$\gamma_{w'}$	Effective unit weight	1.00	–	–	–
		γ_δ	Wall surface friction angle	1.00	–	–	–
		γ_q	Surcharge	1.00	–	–	–
		γ_{RWL}	Residual water level	1.00	–	–	–
		γ_{k_h}	Seismic coefficient for verification	1.00	–	–	–
		γ_a	Structural analysis factor	1.20	–	–	–
Stresses of sheet piled walls	Sandy soil ground	$\gamma_{\tan\phi'}$	Tangent of the angle of shearing resistance	1.00	–	–	–
		$\gamma_{c'}$	Cohesion	1.00	–	–	–
		$\gamma_{w'}$	Unit weight	1.00	–	–	–
		γ_δ	Wall surface friction angle	1.00	–	–	–
		γ_q	Surcharge	1.00	–	–	–
		γ_p	Tractive forces (during traction by ships)	1.00	–	–	–
		γ_{RWL}	Residual water level	1.00	–	–	–
		γ_{k_h}	Seismic coefficient for verification	1.00	–	–	–
		γ_{σ_y}	Steel material yield stress	1.00	–	–	–
		γ_a	Structural analysis factor	1.12	–	–	–
Stresses in tie members		γ_{σ_y}	Steel material yield strength	1.00	–	–	–
		γ_a	Structural analysis factor	1.67	–	–	–

*1: The design value of the tension force in the tie member is calculated from the design value of the tie member installation point reaction obtained from the verification of sheet piling stresses.

② It is necessary to determine which is dominant in the soil composition of the ground under consideration, the sandy soil strata or the cohesive soil strata ground, and use the partial factors as appropriate. For example, if it is determined that the sandy soil strata are dominant, when there is a thin stratum of cohesive soil, verification is carried out using the partial factor for the cohesion of a sandy soil ground.

Regarding the partial factors of quaywalls other than high earthquake-resistance facilities, calculations shall be carried out using a partial factor of 1.0 or higher for the steel material yield stress for the stresses in sheet pile walls in sandy soil ground. For the performance verification of facilities other than ports, there are no examples of the use of design values of the steel material yield strength greater than the JIS specification values. Therefore, in setting the partial factors, the partial factor for the tangent of the angle of shearing resistance with a large sensitivity factor is set to a value larger than the value calculated from a reliability analysis. In this way the flexural moment in the sheet pile wall is reduced, and a correction is carried out so that the partial factor of the steel material strength is 1.0.

③ In the verification of sheet piled quaywalls, it is necessary to take into consideration both the active and passive earth pressure. Also, there are approaches that do not necessarily evaluate the resistance on the passive side as earth pressure and rather evaluate as a beam on an elastic foundation, so partial factors are not provided for earth pressure in **Table 2.3.3**.

(9) Performance Verification of Anchorages for Sheet Pile Quaywalls on Variable Situations in respect of Level 1 earthquake ground motion

① Location of anchorage work

(a) In principle, the location of the anchorage work shall need to be set at an appropriate distance from the sheet pile wall to ensure the structural stability of the main body of the wall and anchorage, depending on the characteristics of the anchorage work. Normally, the further the position of installation of the anchorage work from the surface of the sheet pile wall, the more effective in restraining deformation of the sheet pile wall during an earthquake.[59)]

(b) The location of the anchorage work should be determined appropriately in consideration of the structural type of the anchorage work, because the stability of the anchorage work itself is affected by its position and the location at which the stability is achieved varies depending on the structural type.

(c) The location of concrete wall anchorage is preferably determined to ensure that the active failure plane starting from the intersection of sea bottom and sheet pile wall and the passive failure plane of the slab anchorage drawn from the bottom of the anchorage do not intersect below the ground surface as shown in **Fig. 2.3.15**.

(d) The location of vertical pile anchorage is preferably determined to ensure that the passive failure plane from the point of ℓm1/3 below the tie member installation point of the anchorage and the active failure plane from the intersection of sea bottom and sheet piles do not intersect at the level below the horizontal surface containing the tie member installation point at the anchorage as shown in **Fig. 2.3.16**. The value of ℓ_{m1} is the depth of the first zero point of flexural moment for a free–head pile below the tie member installation point, while the horizontal surface containing the installation point of tie member at the anchorage is assumed as the ground surface.

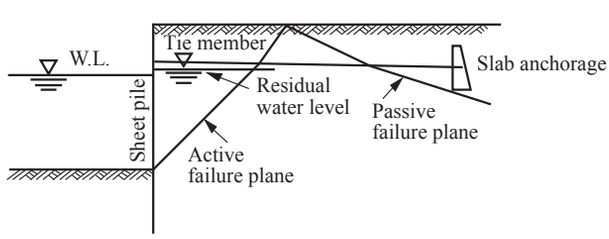

Fig. 2.3.15 Location of Slab Anchorage Works

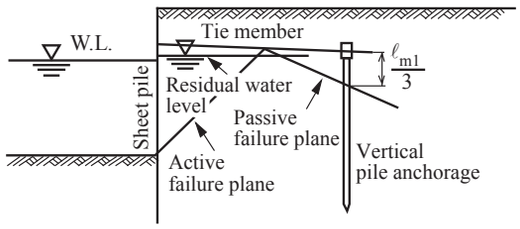

Fig. 2.3.16 Location of Vertical Pile Anchorage

(e) The location of sheet pile anchorage may be determined in accordance with the location of vertical pile when the sheet piles can be regarded as a long pile. When the sheet piles cannot be regarded as a long pile, the location of anchorage may be determined by ignoring the part deeper than the level $\ell_{m1}/2$ below the tie member installation point at the sheet pile anchorage and then applying the method of the location determination of concrete wall anchorage.

(f) For the method to obtain the first zero point of the flexural moment of the vertical pile anchorage and sheet pile anchorage and the method to determine whether a sheet pile anchorage can be considered as a long pile, refer to Port and Harbour Research Institute's method described in **Part III, Chapter 2, 2.4 Pile Foundations, 2.4 .5 Estimation of Pile Behavior using Analytical Methods**.

(g) For ordinary sheet pile quaywalls whose tie members run horizontally, an angle of –15º may be used as the wall friction angle in the determination of the passive failure plane that is drawn from the vertical pile anchorage or sheet pile anchorage.

(h) The location of coupled-pile anchorage should be behind the active failure plane of the sheet pile wall drawn from the sea bottom when it is assumed that the tension of the tie member is resisted only by the axial bearing capacity of the piles as shown in **Fig. 2.3.17**. When the tension of the tie member is evaluated to be resisted by both the axial and lateral bearing capacity in consideration of the bending resistance of the piles, it is necessary to locate the anchorage in accordance with the location of the vertical pile.

(i) The partial factors used in determining the position of the anchorage work may all be taken to be 1.0.

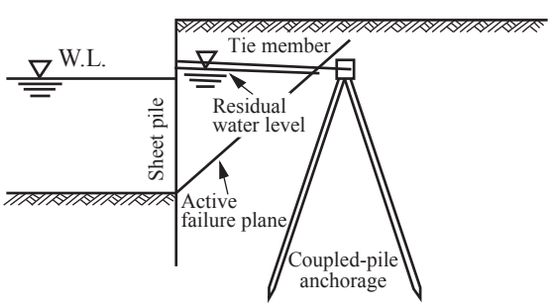

Fig. 2.3.17 Position of Coupled-Pile Anchorage

② Examination of the stability of slab anchorage

(a) The height and placing depth of slab anchorage may be determined to satisfy equation (**2.3.24**), on the assumption that the tie member tension force and the active earth pressure behind the slab anchorage are resisted by the passive earth pressure in front of the slab anchorage as shown in **Fig. 2.3.18**. In the following equations, symbol γ represents the partial factor for its subscript, and subscripts d and k respectively stand for the design value and the characteristic value. In the examination for the stability of the slab anchorage, when calculating the reaction at the tie member installation point using the partial factor associated with the verification of sheet pile stress in **Table 2.3.3**, the partial factor can be set at 2.1 when the structural analysis factor is at permanent situation and 2.0 when it is at variable situation in respect of Level 1 earthquake ground motion.

$$E_{P_d} \geq \gamma_a \left(A_{P_d} + E_{A_d} \right) \tag{2.3.24}$$

where

E_P : resultant passive earth pressure acting on slab anchorage (N/m)

A_P : reaction at the tie member installation point calculated according to **(3) Flexural Moment of Sheet Pile and Reaction at Tie Member Installation Point** above, using the partial factor associated with the verification of sheet pile stress in **Table 2.3.3** (N/m)

E_A : resultant active earth pressure acting on slab anchorage (N/m)

γ_a : structural analysis factor

The design values in the equation may be calculated from the following equation. However, for calculating the earth pressure acting on a slab anchored, normally it is assumed that the surcharge act as shown in **Fig. 2.3.18**, with active earth pressure considered and passive earth pressure not considered.

$E_{A_d} = \gamma_{E_A} E_{A_k}$: γ_{EA}

= 1.2 (Permanent situations), 1.0 (Variable situations in respect of Level 1 earthquake ground motion)

$E_{P_d} = \gamma_{E_P} E_{P_k}$: γ_{EP}

= 1.0 (Permanent situations, variable situations in respect of Level 1 earthquake ground motion)

$A_{P_d} = \gamma_{A_P} A_{P_k}$: γ_{AP}

= 1.0 (Permanent situations, variable situations in respect of Level 1 earthquake ground motion)

(2.3.25)

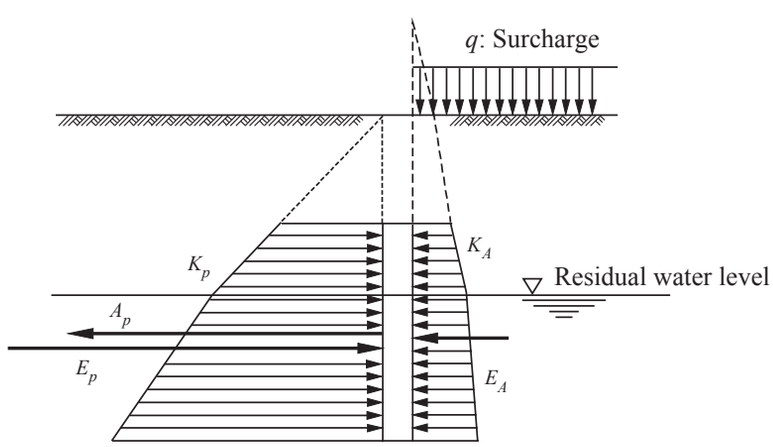

Fig. 2.3.18 Forces Acting on Slab Anchorage

(b) The wall surface friction angle used in calculating the earth pressure is normally assumed to be 15° in the case of active earth pressure and 0° in the case of passive earth pressure. However, in the case of a dead man anchor, an upward acting tension force acts on the anchored, so the wall surface friction force acts upwards, which is the opposite of the normal case of passive earth pressure, and the passive earth pressure will be reduced. In this case the wall surface friction angle is normally assumed to be 15°.

(c) When the active failure plane of the sheet pile and the passive failure plane of the slab anchorage drawn in accordance with ① **Location of anchorage work** above intersect below the ground surface level, it is preferable to consider the fact that the passive earth pressure acting on the vertical surface above the intersection point does not function as a resistance force as shown in **Fig. 2.3.19**; it should be subtracted from the design value of E_P of equation (**2.3.24**). When the intersection point is located above the residual water level, the passive earth pressure to be subtracted may be calculated using equation (**2.3.26**) In the following equation, the subscript *d* indicates the design value.

$$\Delta E_{P_d} = \frac{K_{P_d} w_d h_f}{2} \qquad (2.3.26)$$

where

w : weight of soil (kN/m^2)

h_f : depth from the ground surface to the intersection of the failure planes (m)

K_P : coefficient of passive earth pressure

The design value w_d for the weight of soil is expressed as the product of the design value for the unit weight of the soil layer under review and the depth h_f from the ground surface to the intersection of the failure planes.

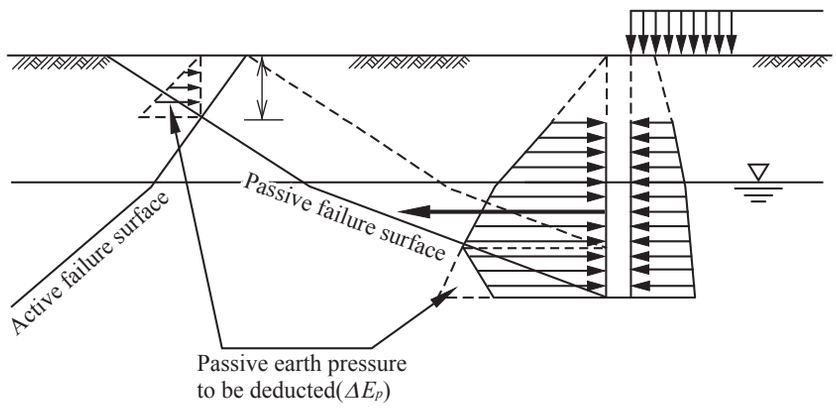

Fig. 2.3.19 Earth Pressure to be subtracted from the Passive Earth Pressure that Acts on Anchorage Wall when the Active Failure Plane of Sheet Pile Wall and the Passive Failure Plane of Slab Anchorage Intersect

(d) Cross section of slab anchorage

Slab anchorage should have stability against the flexural moment caused by the earth pressure and the tie member tension. In general, the maximum flexural moment may be calculated by assuming that the earth pressure is approximated to an equally distributed load and the slab anchorage is a continuous slab in the horizontal direction and a cantilever slab fixed at the tie member installation point in the vertical direction, and then using equation (**2.3.27**). In the following equation, the subscript d indicates the design value.

$$M_{H_d} = \frac{T_d \ell}{12}$$
$$M_{V_d} = \frac{T_d h}{8\ell} \qquad (2.3.27)$$

where

M_H : horizontal maximum flexural moment (N·m)

M_V : vertical maximum flexural moment per meter in length (N·m /m)

T : tie member tension according to **(5) Verification of Stress in Tie Members under Permanent Situation and Variable Situation in respect of Level 1 earthquake ground motion** (N)

ℓ : tie member interval (m)

h : height of slab anchorage (m)

The layout of the reinforcing bars for M_H may be determined on the assumption that the effective width of the slab anchorage is $2b$ with the tie member installation point as the center, where b is the thickness of the slab anchorage at the tie member installation point.

③ Examination of stability of vertical pile anchorage

(a) Vertical pile anchorage may be verified for performance as vertical piles subjected to a horizontal force due to tie member tension.

(b) For the partial factors used in the performance verification, refer to ⑤ **Partial factors**.

④ Examination of stability of coupled-pile anchorage

(a) Coupled-pile anchorage may be verified for performance as coupled piles subjected to a horizontal force due to tie member tension.

(b) For the partial factors used in the performance verification, refer to ⑤ **Partial factors**.

⑤ Partial factors

For standard partial factors for use in the verification of the stability of vertical piles and coupled piles as anchorage for the permanent situations and variable situations in respect of Level 1 earthquake ground motion

adopted for sheet pile quaywalls, refer to the values in **Table 2.3.4**. Partial factors are determined taking into consideration the setting of design methods of the past.

Table 2.3.4 Standard Partial Factors
(a) Permanent situations

Performance requirement					All facilities			
					Serviceability			
					γ	α	μ/X_k	V
Vertical pile anchorage	Stress	γ_{k_s}, γ_{k_c}	Lateral resistance coefficient		1.00	–	–	–
		γ_{σ_y}	Steel yield strength		1.00	–	–	–
		γ_a	Structural analysis factor		1.35	–	–	–
Coupled pile anchorage	Stress	γ_w	Weight of superstructure		1.00	–	–	–
		γ_{w_s}	Weight of soil on superstructure		1.00	–	–	–
		γ_q	Surcharge		1.00	–	–	–
		$\gamma_{k_{ch}}$	Modulus of subgrade lateral reaction		1.00	–	–	–
		γ_{σ_y}	Steel yield strength		1.00	–	–	–
		γ_a	Structural analysis factor		1.45	–	–	–
	Axial resistance force	$\gamma_{c'}$	Cohesion		1.00	–	–	–
		γ_N	*N*-value		1.00	–	–	–
		γ_{Ru}	Resistance force	Pull-out piles	0.40	–	–	–
				Push-in piles	0.45	–	–	–
		γ_a	Structural analysis factor		1.00	–	–	–

*1: The design value of tie tension force is calculated from the design value of tie member installation point reaction obtained from the verification of stresses in the sheet pile.
*2: The design value of the pile axial forces used in analysis of bearing forces in coupled-pile anchorage is obtained from the verification of stresses in the coupled piles.
*3: The N-values and cohesion when calculating the characteristic value of resistance force used in analysis of bearing forces in coupled– pile anchorage are characteristic values.

Table 2.3.4 Standard Partial Factors
(b) Variable situations in respect of Level 1 earthquake ground motion

Performance requirement						All facilities			
						Serviceability			
						γ	α	μ/X_k	V
Vertical pile anchorage	Stress	γ_{k_s}, γ_{k_c}	Lateral resistance coefficient			1.00	–	–	–
		γ_{σ_y}	Yield strength of steel			1.00	–	–	–
		γ_a	Structural analysis factor			1.12	–	–	–
Coupled pile anchorage	Stress	γ_w	Weight of superstructure			1.00	–	–	–
		γ_{w_s}	Weight of soil on superstructure			1.00	–	–	–
		γ_q	Surcharge			1.00	–	–	–
		$\gamma_{k_{ch}}$	Modulus of subgrade lateral reaction			1.00	–	–	–
		γ_{σ_y}	Yield strength of steel			1.00	–	–	–
		γ_a	Structural analysis factor			1.12	–	–	–
	Bearing forces	$\gamma_{c'}$	Cohesion			1.00	–	–	–
		γ_N	*N*-value			1.00	–	–	–
		γ_{Ru}	Resistance force	Pull-out piles		0.40	–	–	–
				Push-in piles	End bearing piles	0.66	–	–	–
					Friction piles	0.50	–	–	–
		γ_a	Structural analysis factor			1.00	–	–	–

*1: The design value of tie tension force is calculated from the design value of tie member installation point reaction obtained from the verification of stresses in the sheet pile.
*2: The design value of the pile axial forces used in analysis of bearing forces in anchored coupled piles is obtained from the verification of stresses in the coupled piles.
*3: The N-values and cohesion when calculating the characteristic value of resistance force used in analysis of bearing forces in coupled pile anchorage are characteristic values.

⑥ Examination of stability of sheet pile anchorage

(a) When the sheet pile anchorage below the tie member installation point is long enough to be regarded as a long pile, the cross section of the sheet pile anchorage may be determined in accordance with ③ **Examination of stability of vertical pile anchorage** above.

(b) Sheet piles anchorage that cannot be regarded as a long pile may be verified in accordance with ② **Examination of stability of slab anchorage** above on the assumption that the earth pressure acts on a range down to $\ell_{m1}/2$ point below the tie member installation point, as shown in **Fig. 2.3.30**. The length ℓ_{m1} is the vertical distance from the tie member installation point to the first zero point of the flexural moment of sheet piles assuming that the sheet pile anchorage is a long pile.

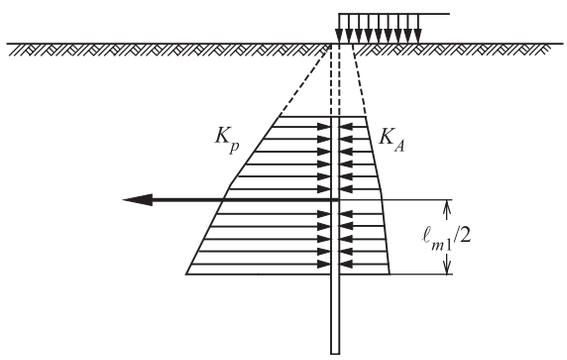

Fig. 2.3.20 Virtual Earth Pressure for Short Sheet Pile Anchorage

(10) Verification of Ground Motions by Dynamic Analysis Methods

① For performance verification of sheet pile quaywalls for ground motions by dynamic analysis methods, refer to **(9) Performance Verification for Ground Motions (detailed methods)** in **2.2 Gravity-type Quaywalls**, **2.2.3 Performance Verification**. However, for sheet pile quaywalls the stress distribution in the soil varies depending on the construction process, so it is necessary to select an analysis method capable of reproducing the stress distribution in the soil before the earthquake.

② For the accidental situations in respect of Level 2 earthquake ground motion, the standard limit values when carrying out the performance verification for the amount of deformation may be appropriately calculated by reference to **1.4 Standard Concept of Allowable Deformation of High Earthquake-resistance Facilities for Level 2 earthquake ground motion**.

(11) Performance Verification of Superstructures

① Superstructure may be verified as a cantilever beam that is fixed at the top of the sheet pile and subjected to the earth pressure as an action. However, it is necessary to consider the tractive forces of ships and the active earth pressure behind the wall for the parts on which bollards are installed and the fender reaction force and the passive earth pressure behind the wall for the parts on which fenders are installed. The only factor that should be considered with regard to conditions during an earthquake is the active earth pressure.

② The tractive forces of ships and fender reactions may be applied as shown in **Fig. 2.3.21** assumed to be acting over a width *b* of the superstructure as shown in **Fig. 2.3.21(b)**. In this case, normally when considering the tractive forces, a surcharge shall be considered in the active earth pressure calculation, and when applying the fender reactions the passive earth pressure surcharge shall not be considered. The wall surface friction angle may be taken to be 15° for active earth pressure and 0° for passive earth pressure. For tractive forces of ships and fender reactions, refer to **Part II, Chapter 8, 2 Actions Caused by Ships**.

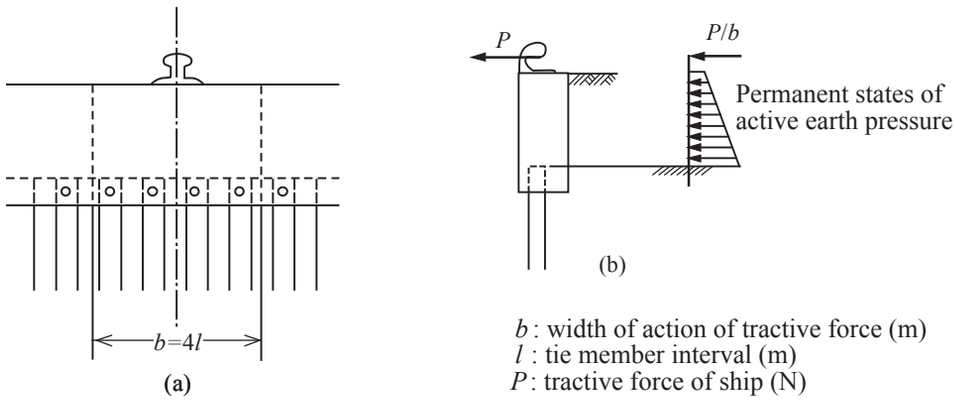

Fig. 2.3.21 Tractive Forces of Ships Acting on the Superstructure

2.3.5 Structural Details

(1) Installation of Sheet Piles, Ties, and Waling

① Waling is normally installed sandwiching tie members, and fixed to the sheet pile with bolts or similar. If waling is installed to the rear of the sheet pile, the cross-section of the fastening bolts can be determined from equation **(2.3.28)**. However, if not embedded in the coping, it is necessary to consider a corrosion allowance. In the following equation, the symbol γ is the partial factor for the subscript, and the subscript d indicates the design value.

$$A_d = \gamma_a \frac{A_{p_d} \ell_w}{n \sigma_{y_d}} \tag{2.3.28}$$

where,

A : bolt cross-sectional area (cm^2)
A_p : reaction at tie member installation point obtained from the above **2.3.4(3) Flexural Moment of Sheet Piles and Reaction at Tie Member Installation Point** (N/m)
ℓ_w : spacing of sheet pile fastened to the waling (m), when installed at one position intermediate between tie members, equivalent to a half of the tie member spacing
n : number of bolts at one location (No.)
σ_y : tensile yield stress of bolt (N/cm^2)
γ_a : structural analysis factor

In the equation, all the partial factors except the structural analysis factor may be taken to be 1.0. If intermediate bolts are used, the structural analysis factor may be taken to be 2.5 for permanent situations, and 1.67 for variable situations in respect of the Level 1 earthquake ground motion. Also, equation **(2.3.18)** may be used to calculate the design value of the tensile yield stress of the steel material.

(2) Tie Member

Tie member tension force obtained in **2.3.4 (5)** ② **Tension force of tie member** must be transmitted safely to the anchorage work. When bending stress caused by the settlement of backfill soil is anticipated, this should be taken into consideration.

(3) Installation of Anchorages and Tie Members

① A continuous beam along the face line of quaywall is usually constructed on top of the anchorage piles, and the tie members are attached to the beam. This beam may be verified for performance as a continuous beam subjected to the tie member tension force and the reaction force of the piles.

2.4 Cantilevered Sheet Pile Quaywalls

Public Notice

Performance Criteria of Sheet Pile Quaywalls

Article 50

2 In addition to the provisions in the preceding paragraph, the performance criteria of cantilevered sheet piles shall be such that the risk in which the amount of deformation of the top of the pile may exceed the allowable limit of deformation is equal to or less than the threshold level under the permanent action situations in which the dominant action is earth pressure and under the variable action situation in which the dominant actions are Level 1 earthquake ground motions, ship berthing, and traction by ships.

[Technical Note]

2.4.1 Fundamentals of Performance Verification

(1) The performance verification methods described here apply to sheet pile walls driven into sandy soil ground, and are not applicable to cohesive soil ground.

(2) An example of the sequence of performance verification of cantilevered sheet pile quaywalls is shown in **Fig. 2.4.1**.

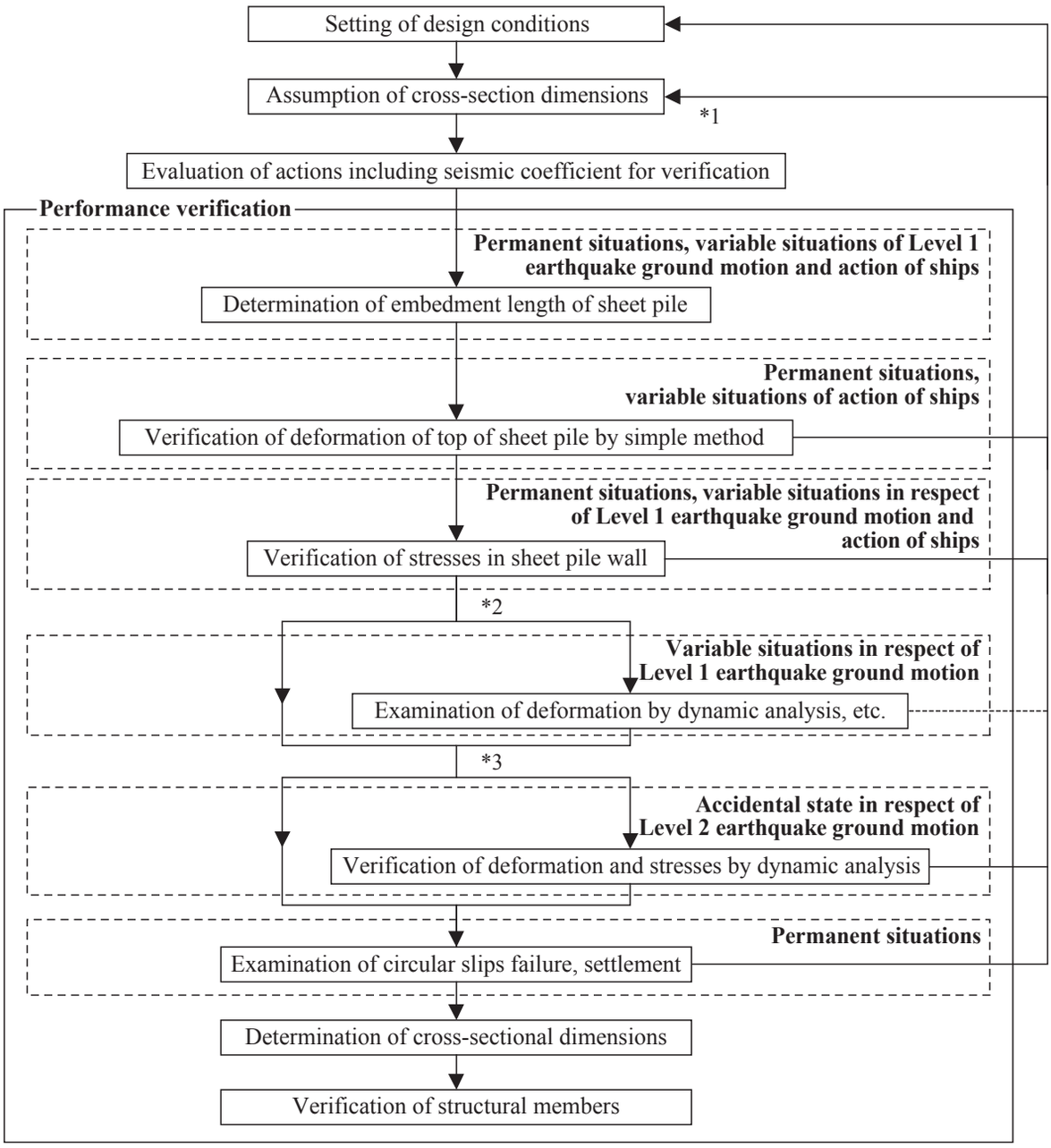

*1: Evaluation of the effect of liquefaction is not shown, so it is necessary to consider these separately.
*2: When necessary, an examination of the amount of deformation by dynamic analysis can be carried out for the Level 1 earthquake ground motion.
For high earthquake-resistance facilities, it is preferable that examination of the amount of deformation be carried out by dynamic analysis.
*3: Verification in respect of Level 2 earthquake ground motion is carried out for high earthquake-resistance facilities.

Fig. 2.4.1 Example of Sequence of Performance Verification for Cantilevered Sheet Pile Quaywalls

(3) **Fig. 2.4.2** shows an example of a cross-section of a cantilevered sheet pile quaywall.

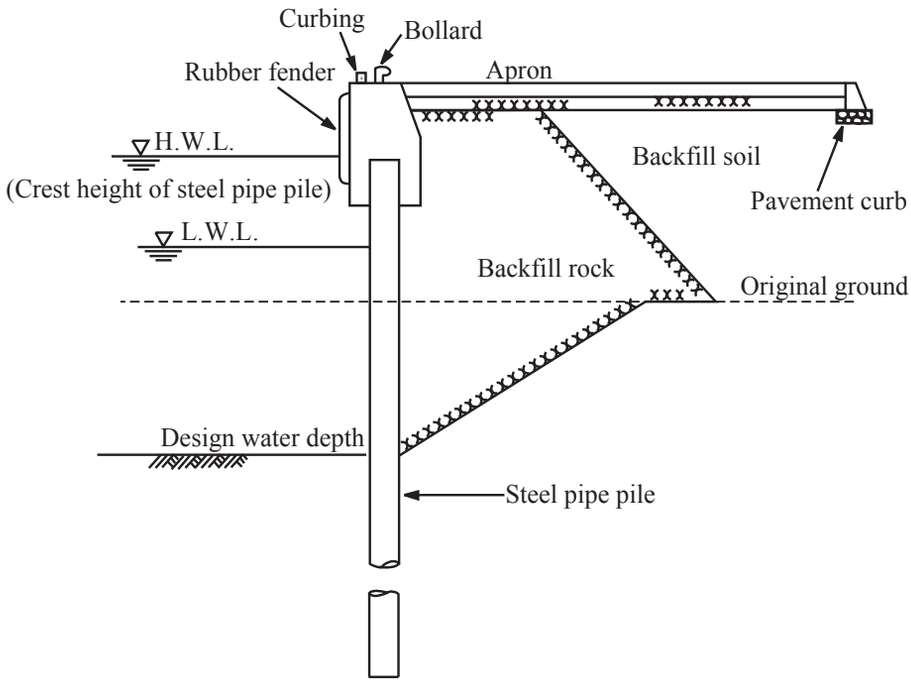

Fig. 2.4.2 Example of Cross-section of Cantilevered Sheet Pile Quaywall

2.4.2 Actions

(1) Forces acting on a cantilevered sheet pile wall can refer to **2.3 Sheet Pile Quaywalls**.

(2) Where the seabed ground is of sandy soil, a virtual bottom surface is assumed at the elevation where the sum of the active earth pressure and residual water pressure is equal to the passive earth pressure. It is assumed that the earth pressure and residual water pressure will act on the part of cantilevered sheet pile wall above such the virtual bottom surface, as illustrated in **Fig. 2.4.3**.

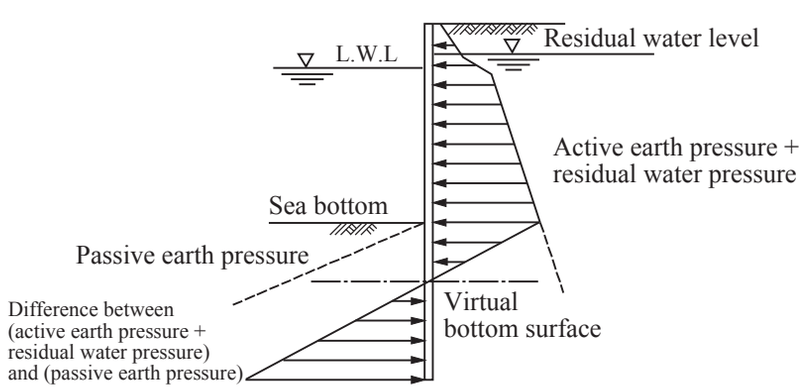

Fig. 2.4.3 Determination of Virtual Bottom Surface

(3) The characteristic value of the seismic coefficient for verification used in the performance verification of cantilevered sheet piled quaywalls under the variable situations in respect of Level 1 earthquake ground motion shall be appropriately calculated taking the structural characteristics into account. For convenience, the characteristic value of the seismic coefficient for verification of cantilevered sheet piled quaywalls may be calculated as the sheet piled quaywalls with vertical pile anchorage, in **2.3 Sheet Pile Quaywalls**, **2.3.2(9) Seismic Coefficient used in Performance Verification of Sheet Pile Quaywalls with Pile Anchorage for Variable Situations in respect of Level 1 earthquake ground motion**.

2.4.3 Performance Verification

(1) Performance Verification of Sheet Pile Walls

① The maximum flexural moment in a sheet pile wall shall be calculated appropriately by using an analysis method corresponding to the mechanical behavior characteristics of the wall. The maximum flexural moment in a sheet pile wall is normally calculated by the PHRI method concerning the lateral resistance of piles.

② The lateral resistance of pile can be calculated in accordance with **2.4.5[4] Estimation of Pile Behavior using Analytical Methods** in **this Part, Chapter 2, 2.4 Pile Foundations**.

③ When steel pipes are used as sheet piles, the secondary stress often develops in steel pipes of a sheet pile wall due to the deformation of the steel pipe cross section (i.e. a circular cross section is deformed into an elliptic one) that is caused by the earth and residual water pressure. Cantilevered sheet pile walls are the structures tend to experience large displacement, and there is a risk about such walls that a relatively high secondary stress may develop in the areas around the point where the flexural moment becomes maximum. The larger the diameter of the steel pipe, the higher the level of secondary stress becomes. In such a case, therefore, it is preferable to perform examination of strength against the secondary stress. The secondary stress of a steel pipe is calculated using equation (**2.4.1**).

$$\sigma_t = \alpha\, p \left(\frac{D}{t}\right)^2 \times 10^{-3} \tag{2.4.1}$$

where

σ_t : secondary stress (N/mm²)
p : earth pressure and residual water pressure acting on the sheet pile wall (kN/m²)
D : diameter of pipe (mm)
t : plate thickness of pipe (mm)
α : coefficient

The coefficient α in the equation may be defined by reference to **Fig. 2.4.4**, taking into consideration the width of action, foundation conditions and constraint conditions. In this figure, "Sliding" and "Fixed" indicate the displacement conditions of the joints of the steel pipe pile, in accordance with the ground conditions and constraint conditions of the sheet piling.

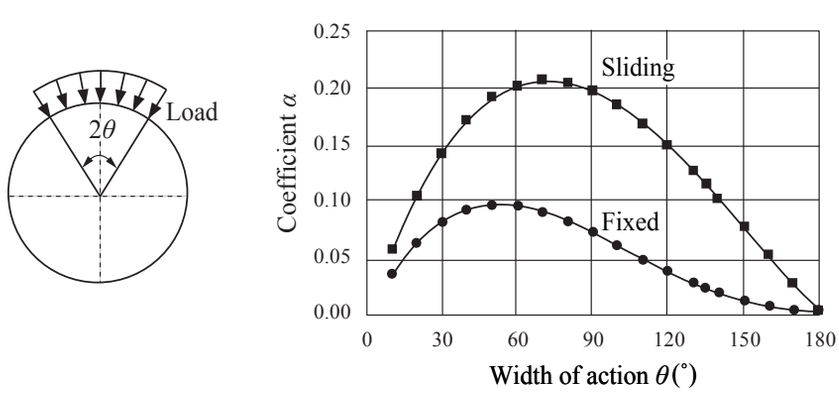

Fig. 2.4.4 Coefficient α

Verification may be carried out using the following equation **(2.4.2)**, based on the axial stress σ_l in the pile obtained in accordance with **5.2 Open-Type Wharves on Vertical Piles**, and the secondary stress σ_t obtained from equation **(2.4.1)**. In the following, the symbol γ is the partial factor corresponding to the subscript, and the subscripts k and d indicate the characteristic value and the design value, respectively. The structural analysis factor may be taken to be 1.2 for permanent situations, and 1.0 for variable situations in respect of Level 1 earthquake ground motion.

$$\gamma_a \gamma_b \sqrt{\sigma_l^{\,2} + \sigma_t^{\,2} - \sigma_l \sigma_t} \le f_{y_d} \tag{2.4.2}$$

where,

σ_l : stress due to axial forces in the pile (N/mm²)

σ_t : secondary stress due to bending moment in the pile (N/mm2)
f_{y_d} : design yield stress of the pile (N/mm2), $f_{y_d} = f_{y_k}/\gamma_m$
f_{y_k} : yield stress of pile (N/mm2)
γ_m : material coefficient (= 1.05)
γ_b : member coefficient (= 1.1)
γ_a : structural analysis factor

The design values in the equation may be calculated from the following equation. Also, the partial factors may be all taken to be 1.0.

$$\sigma_{l_d} = \gamma_{\sigma_l}\sigma_{l_k}$$
$$\sigma_{t_d} = \gamma_{\sigma_t}\sigma_{t_k} \qquad (2.4.3)$$

(2) Examination of Embedded Lengths of Sheet Piles

The embedded length of sheet piles shall be equal to or longer than the effective length of piles that is calculated in accordance with **2.4.5 Static Maximum Lateral Resistance of Piles** in **Part II, Chapter 2, 2.4 Pile Foundations**. Because a cantilevered sheet pile wall retains the earth behind the wall in the mechanism same as piles do, the embedded length of the sheet pile may be calculated in the same way as in the case of a pile. In the PHRI method for the lateral resistance of piles, the required embedded length is calculated as 1.5 ℓ_{m1}, where ℓ_{m1} represents the depth of first zero point of the flexural moment of cantilevered pile. It should be noted that the embedded length calculated here is that measured not from the sea bottom surface, but that measured from the virtual bottom surface.

2.5 Sheet Pile Quaywalls with Raking Pile Anchorages

2.5.1 Fundamentals of Performance Verification

(1) The following is applicable to the performance verification of mooring facilities in which raking piles are driven behind the sheet pile wall, and the tops of the sheet pile wall and the raking piles are connected to support the soil behind the sheet pile wall.

(2) An example of the sequence of performance verification of sheet piled quaywalls with raking pile anchorages is shown in **Fig. 2.5.1**.

(3) An example of a cross-section of sheet pile quaywalls with raking pile anchorages is shown in **Fig. 2.5.2**.

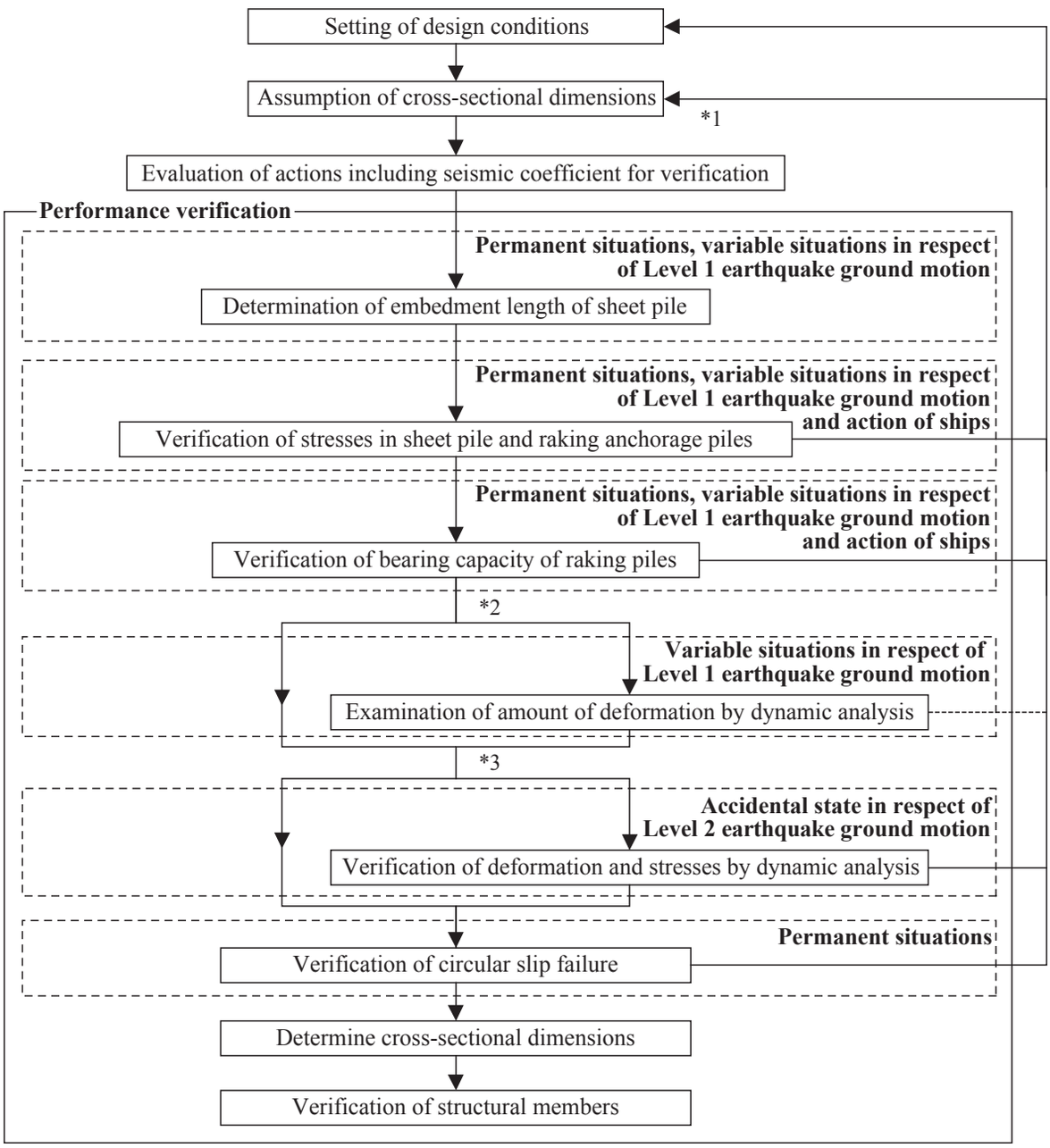

*1: The evaluation of the effect of liquefaction is not shown, it is necessary to consider these separately.
*2: When necessary, an examination of the amount of deformation by dynamic analysis can be carried out for the Level 1 earthquake ground motion.
For high earthquake-resistance facilities, it is preferable that the examination of the amount of deformation be carried out by dynamic analysis.
*3: Verification in respect of Level 2 earthquake ground motion is carried out for high earthquake-presistance facilities.

Fig 2.5.1 Example of Sequence of Performance Verification of Sheet Pile Quaywalls with Raking Pile Anchorages

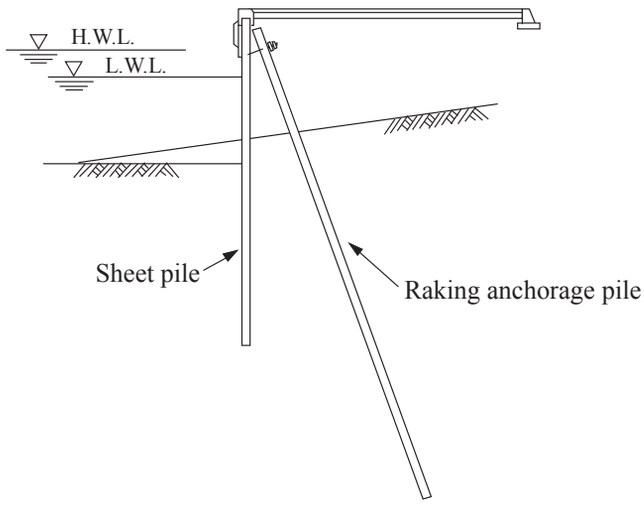

Fig. 2.5.2 Example of Cross-section of Sheet Pile Quaywall with Raking Pile Anchorage

2.5.2 Actions

(1) For the action on sheet piled walls with raking pile anchorages, refer to **2.3 Sheet Pile Quaywalls**.

(2) The characteristic value of the seismic coefficient for verification used in performance verification of sheet pile quaywalls with raking pile anchorages for the variable situations in respect of Level 1 earthquake ground motion shall be appropriately calculated taking the structural characteristics into consideration. For convenience, the characteristic value of the seismic coefficient for verification of sheet pile quaywalls with raking pile anchorages may be calculated as the sheet pile quaywalls vertical pile anchorage, in **2.3.2(9) Seismic Coefficient used in Performance Verification of Sheet Pile Quaywalls with Pile Anchorage for Variable Situations in respect of Level 1 earthquake ground motion**.

2.5.3 Performance Verification

(2) Verification of Stresses in Sheet Pile and Raking Anchorage Piles

① For sheet pile quaywalls with raking pile anchorages, verification may be carried out for the resistance of the sheet pile and the piles, against the actions in the horizontal and vertical direction at the connection point, earth pressure and residual water pressure.

② The horizontal and vertical forces acting on the connection point between a sheet pile and a raking pile can be calculated by assuming that the connection is a pin structure.

(3) Determination of Embedded Lengths of Sheet Pile and Raking Pile
The embedded length of the sheet pile or raking anchorage pile that is required to resist the forces acting in the axial direction as well as the direction perpendicular to the axis can be calculated in accordance with **Part II, Chapter, 2.4 Pile Foundations**. However, it is preferable to examine the bearing capacity in the axial direction of the sheet pile and that of the raking anchorage pile through loading and pulling tests.

2.5.4 Performance Verification of Structural Members

Performance verification of sheet piled quaywalls with raking pile anchorages can apply that of sheet piled quaywalls and open type wharves on vertical piles. Refer to **2.3.4 Performance Verification**, and **5.2.5 Performance Verification of Structural Members**.

2.6 Open-type Quaywall with Sheet Pile Wall Anchored by Forward Batter Piles

2.6.1 Fundamentals of Performance Verification

(1) The provisions in this section shall be applied to the performance verification of sheet pile quaywalls that are built by coupling the sheet pile heads with the raking anchorage piles driven in the ground in front of the sheet piles that retain the earth in the back.

(2) Open-type quaywall with sheet pile wall anchored by foreward batter piles are normally constructed with an open–type wharf built in front of the sheet pile wall. The open–type wharf may or may not be integrated into the sheet pile wall, but this section provides guidelines for the cases in which the open–type wharf and sheet pile wall are integrated. For the cases in which the open–type wharf is not integrated into the sheet pile wall, refer to **2.3 Sheet Pile Quaywalls**, **5.2 Open–Type Wharves on Vertical Piles**, and **5.3 Open–Type Wharves on Coupled Raking Piles**. The performance verification method described in this section is based on the sheet pile performance verification with the equivalent beam method. Therefore, the structural types covered by this section are steel sheet pile walls driven into a sandy soil ground or a hard clayey soil ground.

(3) An example of the sequence of performance verification of Open-type Quaywall with Sheet Pile Wall Anchored by Forward Batter Piles is shown in **Fig. 2.6.1**.

(4) Here, a method of carrying out the performance verification of the sheet piles and the performance verification of the other piles in three stages is described, as a method of simple verification. Performance verification of the sheet piles can be carried out in accordance with the methods of performance verification of sheet pile, by considering the connection points between the raking support piles and the sheet pile to be fulcrums. Next, the reaction at the connection points between the raking support piles and the sheet pile is considered to be a horizontal force acting on the piled pier superstructure, and the axial forces acting in the sheet pile and the piles are calculated in accordance with the performance verification of open type wharves on raking piles. Then, the sheet pile and the raking support piles are considered to be a rigid frame structure fixed at a virtual fixing point, and the moments in the top connection points due to earth pressure and other horizontal forces are calculated.

(5) An example of cross-section of open-type quaywall with sheet pile wall anchored by forward batter piles is shown in **Fig. 2.6.2**.

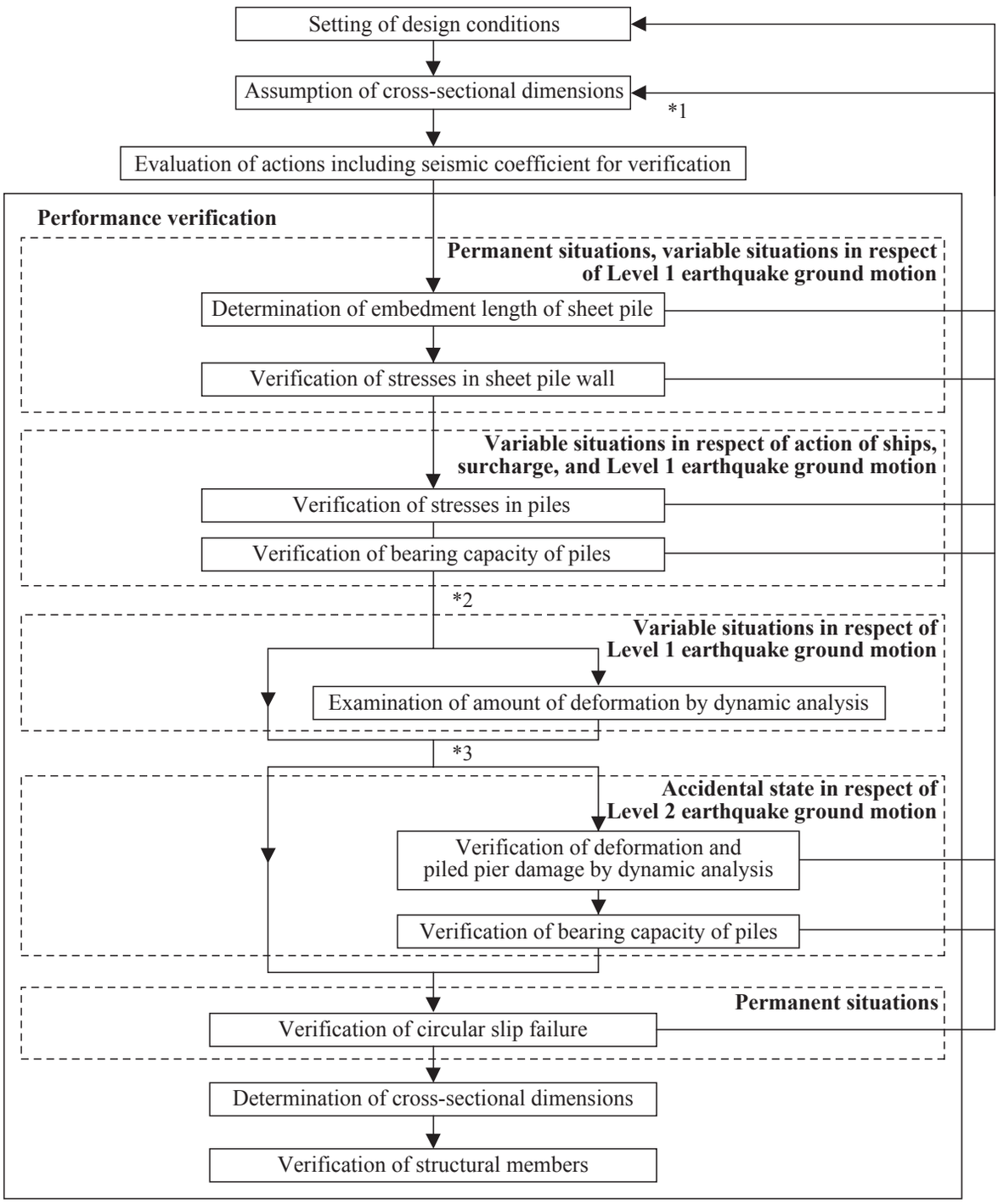

*1: The evaluation of the effect of liquefaction is not shown, it is necessary to consider these separately.
*2: When necessary, an examination of the amount of deformation by dynamic analysis can be carried out for the Level 1 earthquake ground motion.
For high earthquake-resistance facilities, it is preferable that the examination of the amount of deformation be carried out by dynamic analysis.
*3: Verification in respect of Level 2 earthquake ground motion is carried out for high earthquake-resistance facilities.

Fig. 2.6.1 Example of Sequence of Performance Verification of Open-type Quaywall with Sheet Pile Wall Anchored by Forward Batter Piles

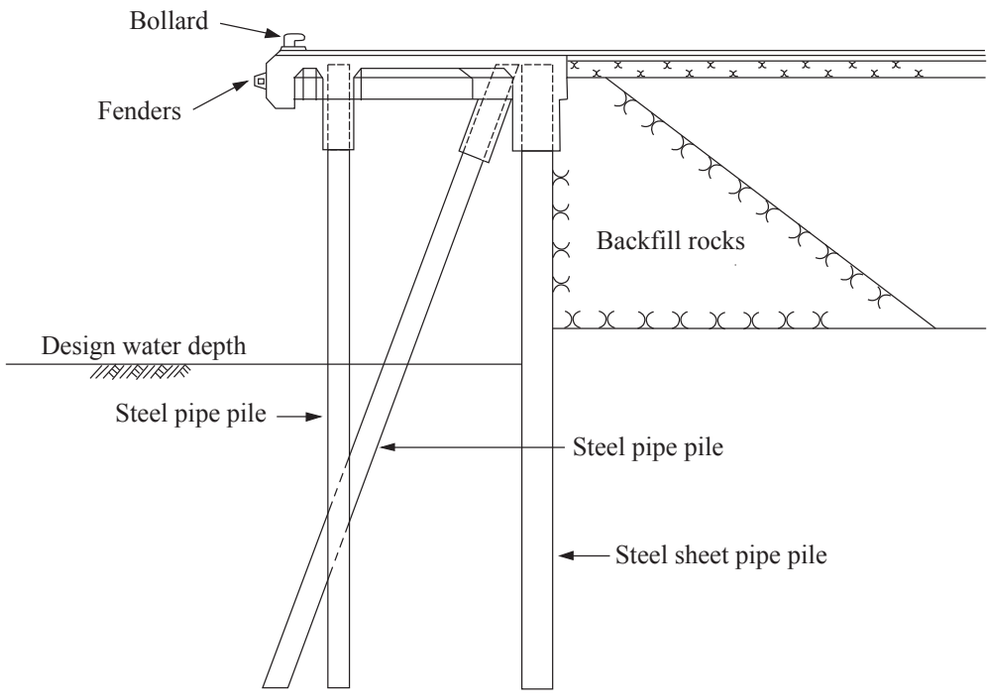

Fig. 2.6.2 Example of Cross-section of Open-type Quaywall with Sheet Pile Wall Anchored by Forward Batter Piles

2.6.2 Actions

(1) For the action on the piled pier part, refer to **5.2 Open-Type Wharves on Vertical Piles**.

(2) For the action of the sheet pile, refer to **2.3 Sheet Pile Quaywalls**.

(3) The self weight of reinforced concrete of the superstructure of open–type wharf can be calculated with a unit weight of 21kN/m^2 in the performance verification of the vertical and raking piles and sheet piles in accordance with **5.3 Open-Type Wharves on Coupled Raking Piles**.

(4) The fender reaction force can be calculated using calculation methods described in **5.2 Open-Type Wharves on Vertical Piles**.

(5) The characteristic value of the seismic coefficient for verification used in performance verification of open-type quaywall with sheet pile wall anchored by foreward batter piles for the variable situations in respect of Level 1 earthquake ground motion shall be appropriately calculated taking the structural characteristics into consideration. For convenience, the characteristic value of the seismic coefficient for verification used in performance verification of open-type quaywall with sheet pile wall anchored by foreward batter piles may be calculated in accordance with **5.2 Open Type Wharf on Vertical Piles, 5.2.3(10) Ground Motion used in Performance Verification of Seismic–resistant**.

2.6.3 Layout and Dimensions

(1) Refer to the size of deck block and layout of piles described in **5.2 Open-Type Wharves on Vertical Piles** for the size of one block of the superstructure and layout of piles.

(2) It is preferable that layout and inclination of the raking piles are determined in consideration of their positional relationship with other piles and construction work–related constraints such as those concerning the capacity of pile driving equipment. A pile inclination of about 20º is normally used for raking piles.

(3) For the dimensions of the superstructure, refer to dimensions of superstructure in **5.2 Open-Type Wharves on Vertical Piles**.

2.6.4 Performance Verification

(1) Performance verification of the sheet pile wall may be carried out considering the connection point between the raking support pile and the sheet pile as fulcrums. Refer to **2.3 Sheet Pile Quaywalls**.

(2) For the earth pressure and residual water pressure acting on the sheet pile, the connection point between the raking support pile and the sheet pile may be considered to be a fulcrum reaction.

(3) If it is necessary to carry out verification of rotation of the piled pier block, this shall be appropriately considered.

(4) Performance Verification of the Piled Pier Part

① For the performance verification of the piled pier part, refer to **5.2 Open-type Wharves on Vertical Piles**, and **5.3 Open-type Wharves on Coupled Raking Piles**.

② For assumptions regarding the seabed, refer to assumptions regarding the seabed in **5.2 Open–type Wharves on Vertical Piles**. For the horizontal resistance of piles, estimation of the behavior of the piles may be carried out using the method of Y. L. Chang.

③ The vertical loads distributed to the pile heads can be calculated as the fulcrum reaction forces under the assumption that the superstructure of open–type wharf is a simple beam supported at the positions of pile heads. The axial forces on the raking pile and sheet pile should be calculated according to equation (**2.4.60**) in **2.4.5[6] Lateral Bearing Capacity of Coupled Piles** in **Part III, Chapter 2, 2.4 Pile Foundations** using the horizontal force on the quaywall and the vertical load distributed to pile heads. For the axial force of a vertical pile, the vertical load distributed to the pile head may be used.

④ The flexural moment at the connection of the raking pile and the sheet pile may be calculated as the moment due to the earth pressure, residual water pressure and other horizontal forces, by assuming that the raking and sheet piles constitute a rigid frame fixed at the virtual fixed point.

(5) Examination of embedded length with respect to the axial force, and examination of the embedded length with respect to the lateral resistance can be made in accordance with **5.2 Open-type Wharves on Vertical Piles**.

2.6.5 Performance Verification of Structural Members

(1) The performance verification for structural members of sheet pile wall anchored by forword batter piles can be made by referring to the provisions in **2.3 Sheet Pile Quaywalls** and **5.2 Open-type Wharves on Vertical Piles**.

(2) The connecting point of the sheet pile wall and raking pile need to be structured so that the load transmission functions adequately.

(3) The superstructure of open–type wharf shall be structured so that it fully withstands the flexural moment transmitted from the sheet pile wall.

(4) The connecting point between the sheet pile wall and raking pile must have sufficient reinforcement, because breakage or damage at the connecting point could lead to the collapse of the entire quaywall. The flexural moment generated in the head of the sheet pile is transmitted to the superstructure of open–type wharf. Therefore, this flexural moment need to be taken into consideration in the performance verification of the superstructure.

2.7 Double Sheet Pile Quaywalls

Public Notice

Performance Criteria of Double Sheet Pile Quaywalls

Article 50

3 In addition to the provisions in the first paragraph, the performance criteria of double sheet pile structures shall be as specified in the subsequent items

(1) The risk of occurrence of sliding of the structural body shall be equal to or less than the threshold level under the permanent action situations in which the dominant action is earth pressure and under the variable action situation in which the dominant action is Level 1 earthquake ground motions.

(2) The risk that the deformation of the top of the front or rear sheet pile may exceed the allowable limit of deformation shall be equal to or less than the threshold level under the permanent action situation in which the dominant action is earth pressure and under the variable action situation in which the dominant action is Level 1 earthquake ground motions.

(3) The risk of losing the stability due to shear deformation of the structural body shall be equal to or less than the threshold level under the permanent action situation in which the dominant action is earth pressure.

[Technical Note]

2.7.1 Fundamentals of Performance Verification

(1) The following is applicable to the performance verification of mooring facilities that use a double sheet pile structure.

(2) A double sheet pile quaywall is a mooring facility in which two rows of sheet pile walls are driven and connected by tie members or similar, then the space between the two walls is backfilled with soil so that an earth retaining structure is formed.

(3) An example of the cross-section of a double sheet pile quaywall is shown in **Fig. 2.7.1**.

(4) An example of the sequence of performance verification of double sheet pile quaywalls is shown in **Fig. 2.7.2**.

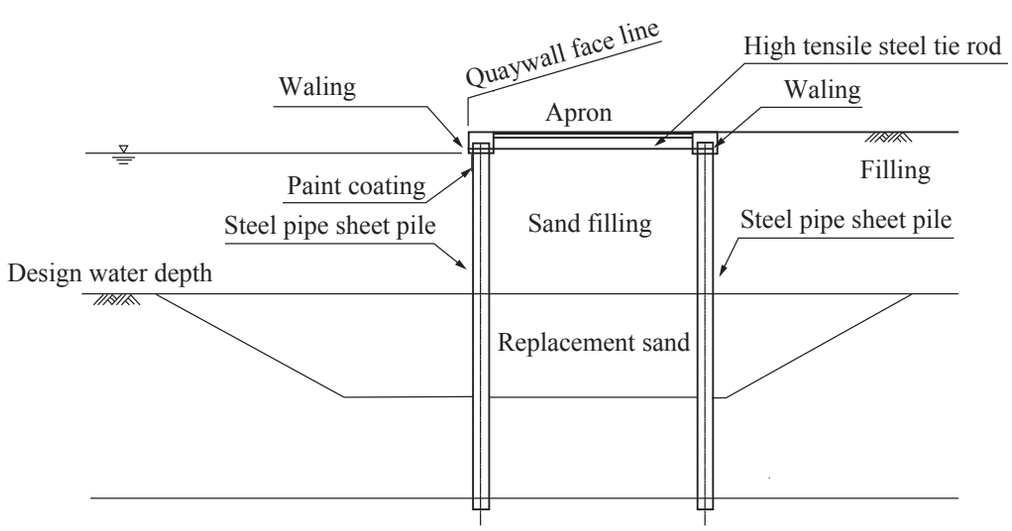

Fig. 2.7.1 Example of the Cross-section of a Double Sheet Pile Quaywall

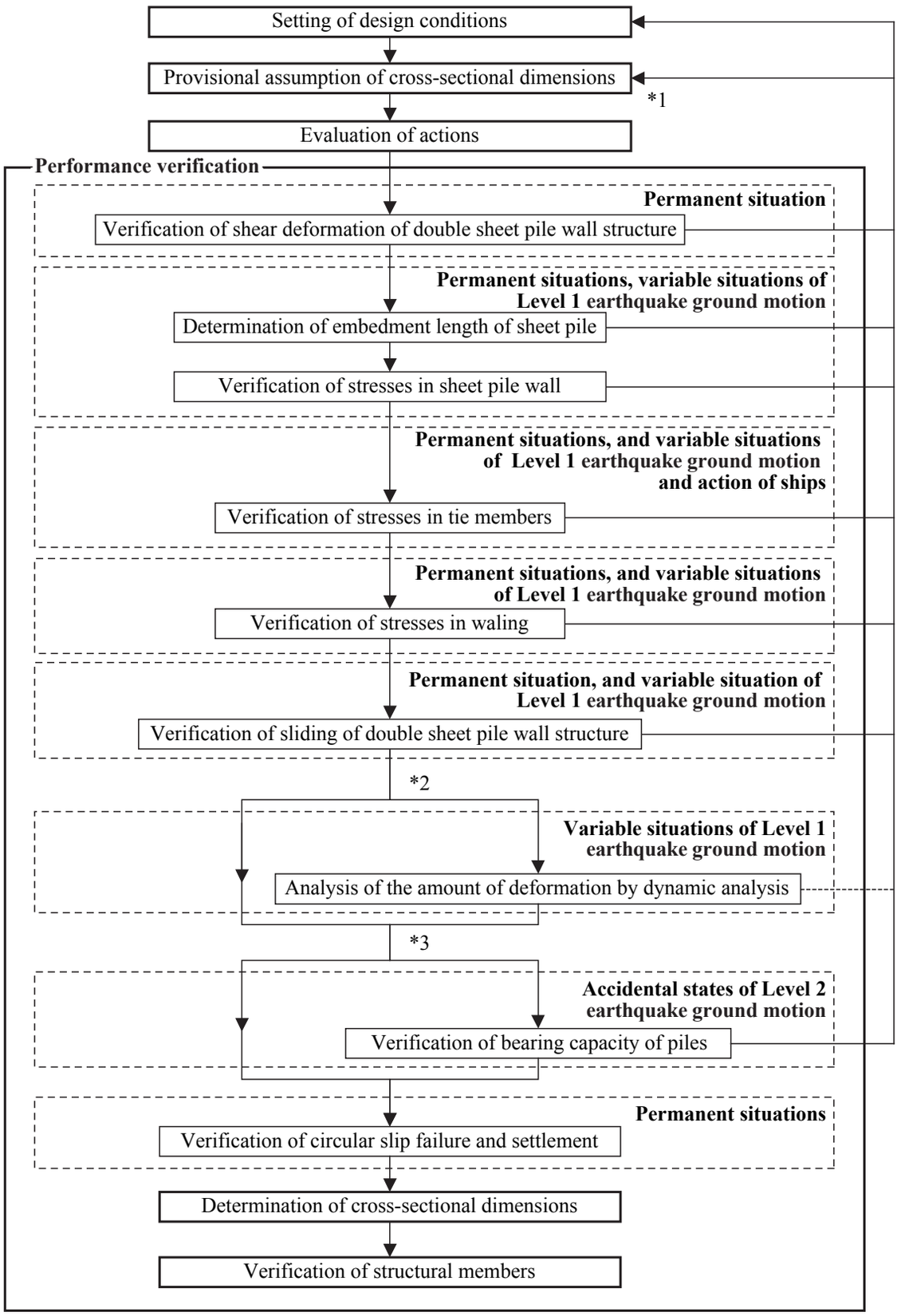

*1: The evaluation of the effect of liquefaction is not shown, so this must be separately considered.
*2: Analysis of the amount of deformation due to Level 1 earthquake ground motion may be carried out by dynamic analysis when necessary. For high earthquake-resistance facilities, analysis of the amount of deformation by dynamic analysis is desirable.
*3: For high earthquake-resistance facilities, verification is carried out for Level 2 earthquake ground motion.

Fig. 2.7.2 Example of the Sequence of Performance Verification of Double Sheet Pile Quaywalls

(5) In the performance verification of double sheet pile quaywalls, the performance verification methods for steel sheet pile cellular-bulkhead quaywalls or sheet pile quaywalls with sheet pile anchorage have conventionally been applied. Therefore, when verifying the performance of a double sheet pile quaywall with the conditions that are similar to those used in existing quaywalls, performance verification methods described in this section may be used.

2.7.2 Actions

(1) For the action on double sheet pile quaywalls, refer to **2.9 Cellular-bulkhead Quaywalls with Embedded Sections**.

(2) The characteristic value of the seismic coefficient for verification used in performance verification of double sheet pile quaywalls for the variable situations of Level 1 earthquake ground motion shall be appropriately calculated taking into consideration the structural characteristics. For convenience, the characteristic value of the seismic coefficient for verification of double sheet pile quaywalls may be calculated in accordance with that for anchored vertical pile type sheet piled quaywalls, in **2.3.2(9) Performance Verification of Anchorages for Sheet Pile Quaywalls on Variable Situation in respect of Level 1 Earthquake Ground Motion**.

2.7.3 Performance Verification

(1) The examination to determine the width between two sheet pile walls to achieve the required strength against shear deformation can be made in accordance with **2.9 Cellular-bulkhead Quaywalls with Embedded Sections**.

(2) The calculation of the deformation moment can be made in accordance with **2.9 Cellular-bulkhead Quaywalls with Embedded Sections**.

(3) The calculation of the resistance moment can be made in accordance with **2.9 Cellular-bulkhead Quaywalls with Embedded Sections**. However, the resistance moment due to the frictions at the joints between sheet piles of the partition walls is not considered normally.

(4) The embedded length of sheet piles is determined as the longer one of either that calculated by the method for sheet piles having ordinary anchorage referring to examination of embedded lengths of sheet piles in **2.3 Sheet Pile Quaywalls** or that satisfying the allowable limit for horizontal displacement requirement referring to examination of stability of wall body as a whole and examination of displacement of wall top in **2.9 Cellular-bulkhead Quaywalls with Embedded Sections**

(5) A double sheet pile quaywall can be considered as a kind of gravity wall. Thus it is necessary to verify the stability against sliding of the quaywall and the overall slope stability including the wall structure, as in the case of a cellular-bulkhead type quaywall. In the performance verification reference can be made in accordance with the performance verification described in **2.2 Gravity-type Quaywalls**. Sliding is usually examined either at the virtual bottom surface which is taken at the sea bottom or the horizontal plane at the toe of the sheet pile wall. In the former case, the resistance of the sheet pile wall below the sea bottom should be ignored. In the examination of the overall slope stability including the double sheet pile quaywall, the embedded length of the double sheet pile quaywall must be compared with the required embedded length calculated for a corresponding single sheet pile quaywall with anchorage. If the former is found longer than the latter, the resistance of the portion of sheet piles below the calculated toe of the latter sheet piles should be ignored against the circular slip plane passing the level below the toe.

(6) Performance verification of the slab and upright section of the superstructure can be made in accordance with the performance verification of relieving platform in **2.8 Quaywalls with Relieving Platforms**. Foundation piles are sometimes driven into the filling material to support the superstructure. These piles should have sufficient safety against the horizontal and vertical forces transmitted from the superstructure. Here it is assumed that the vertical force transmitted from the superstructure is entirely borne by the piles, and the vertical bearing capacity of the pile is calculated by ignoring the skin friction between the pile and the filling material. The horizontal force that acts on the superstructure is transmitted to the double sheet pile quaywall partly through the piles and partly through the sheet piles. Therefore it is necessary to determine appropriate burden shearing of the horizontal force by the two sections.

(7) When double sheet piled wall structures are used, the amount of deformation may be evaluated by a static method using Sawaguchi's method [72] or Ohori's method.[73]

2.8 Quaywalls with Relieving Platforms

Public Notice

Performance Criteria of Quaywalls with Relieving Platforms

Article 51

The performance criteria of quaywalls with relieving platforms shall be as specified in the subsequent items:

(1) Sheet piles shall have the embedment length as necessary for structural stability and contain the degree of risk that the stresses in the sheet piles may exceed the yield stress at the level equal to or less than the threshold level under the permanent action situation in which the dominant action is earth pressure and under the variable action situation in which the dominant action is Level 1 earthquake ground motions.

(2) The risk of occurrence of sliding or overturning to the structural body shall be equal to or less than the threshold level under the permanent action situation in which the dominant action is earth pressure and under the variable action situation in which the dominant action is Level 1 earthquake ground motions.

(3) The following criteria shall be satisfied under the permanent action situation in which the dominant action is self weight:

(a) The risk that the axial forces acting in the relieving platform piles may exceed the resistance force based on failure of the soils shall be equal to or less than the threshold level.

(b) The risk of impairing the integrity of the members of the relieving platform shall be equal to or less than the threshold level.

(4) The following criteria shall be satisfied under the permanent action situation in which the dominant action is earth pressure and under the variable action situation in which the dominant actions are Level 1 earthquake ground motions, ship berthing, and traction by ships:

(a) The risk that the axial forces acting on the relieving platform piles may exceed the resistance force based on failure of the soils shall be equal to or less than the threshold level.

(b) The risk that the stress acting on the relieving platform piles may exceed the yield stress shall be equal to or less than the threshold level.

(c) The risk of impairing the integrity of the members of the relieving platform shall be equal to or less than the threshold level.

(5) The risk of occurrence of a slip failure in the ground that passes below the bottom end of the sheet piling shall be equal to or less than the threshold level under the permanent action situation in which the dominant action is self weight.

[Commentary]

(1) Performance Criteria of Quaywalls with Relieving Platforms

① The performance criteria of quaywalls with relieving platforms shall use the following in accordance with the design situations and the structure members.

Besides these requirements, when necessary the settings of the **Public Notice Article 22 Paragraph 3** (Scouring and Washing Out) shall be applied.

② Sheet pile and Structural Stability

(a) The setting for sheet pile and structural stability of the performance criteria of quaywalls with relieving platforms and the design situations excluding accidental situations shall be in accordance with **Attached Table 37**.

Attached Table 37 Setting for the Performance Criteria of Sheet Pile and Structural Stability of Quaywalls with Relieving Platforms and the Design Situations excluding Accidental Situations

Ministerial Ordinance			Public Notice			Performance requirements	Design situation			Verification item	Index of standard limit value
Article	Paragraph	Item	Article	Paragraph	Item		Situation	Dominating action	Non–dominating action		
26	1	2	51	1	1	Serviceability	Permanent	Earth pressure	Water pressure, surcharges	Necessary embedment length	System failure probability under permanent situations of self weight and earth pressure (High earthquake-resistance facility $P_f = 1.7\times10^{-3}$) (Other than high earthquake-resistance facility $P_f = 4.0\times10^{-3}$)
										Yielding of sheet pile	
							Variable	L1 earthquake ground motion	Earth pressure, water pressure, surcharges	Necessary embedment length	Allowable amount of deformation of top of quaywall: apply sheet pile quaywalls
										Yielding of sheet piling	
					2		Permanent	Earth pressure	Self weight, water pressure, surcharge	Sliding / overturning of wall structure	System failure probability under permanent situations of self weight and earth pressure (High earthquake-resistance facility $P_f = 1.7\times10^{-3}$) (Other than high earthquake-resistance facility $P_f = 4.0\times10^{-3}$)
							Variable	L1 earthquake ground motion	Self weight earth pressure, water pressure, surcharge	Sliding / overturning of wall structure	Limit value for sliding Limit value for overturning (Allowable amount of deformation of top of quaywall: apply gravity-type quaywalls)
					5		Permanent	Self weight	Water pressure, surcharge	Circular slip failure of ground	System failure probability under permanent situations of self weight and earth pressure (High earthquake-resistance facility $P_f = 1.7\times10^{-3}$) (Other than high earthquake-resistance facility $P_f = 4.0\times10^{-3}$)

(b) Performance criteria of sheet pile
Of the settings for the performance criteria for relieving platform quaywalls and the design situations, those applicable to the sheet pile shall comply with the settings in accordance with the **Public Notice Article 50 Paragraph 1** (Performance Criteria for Sheet Piled Quaywalls).

(c) Performance Criteria of Wall Structures
In the verification of the stability of the structure of quaywalls with relieving platforms, the wall structure is equivalent to the wall structure in the case of a gravity-type quaywall. The wall structure shall comply with the setting of the **Public Notice Article 49** (Performance Criteria of Gravity-type Quaywalls).

(d) Performance Criteria of Circular Slips in the Ground
The setting for circular slips in the ground shall comply with the settings of the **Public Notice Article 50 Paragraph 1** (Performance Criteria of Sheet Pile Quaywalls).

③ Relieving Platform and Relieving Platform Piles

(a) The settings for relieving platforms and relieving platform piles shall be as shown in **Attached Table 38**.

Attached Table 38 Settings for the Performance Criteria for the Relieving Platform and Relieving Platform Piles of Quaywalls with Relieving Platforms and the Design situations excluding Accidental Situations

Ministerial Ordinance			Public Notice			Performance requirements	Design situation			Verification item	Index of standard limit value
Article	Paragraph	Item	Article	Paragraph	Item		Situation	Dominating action	Non–dominating action		
26	1	2	51	1	3a	Serviceability	Permanent	Self weight	Surcharging, water pressure	Axial forces on relieving platform piles	Resistance capacity based on failure of the ground (pushing, pulling)
					3b				Earth pressure, water pressure, surcharge	Serviceability of cross-section of relieving platform	Limit value of bending compressive stress (serviceability limit state)
					4a		Variable	Earth pressure	Self weight, water pressure, surcharge	Axial forces acting on the relieving platform piles	Resistance capacity based on failure of the ground (pushing, pulling)
								L1 earthquake ground motion	Self weight, earth pressure, water pressure, surcharge		
								Traction of ships			
					4b		Permanent	Earth pressure	Water pressure, surcharge	Yielding of relieving platform	Design yield stress
							Variable	L1 earthquake ground motion	Self weight, earth pressure, water pressure, surcharge		
								Traction of ships			
					4c		Permanent	Earth pressure	Water pressure, surcharge	Serviceability of cross-section of relieving platform	Limiting value of bending compressive stress (serviceability limit state)
							Variable	L1 earthquake ground motion	Self weight, earth pressure, water pressure, surcharge	Failure of cross-section of relieving platform	Design cross-sectional resistance force (ultimate limit state)
								Traction of ships			

(b) Axial Forces Acting on the Relieving Platform Piles
Verification of the axial forces acting on the relieving platform piles is to verify the risk that the axial forces acting on the relieving platform piles will exceed the resistance force based on failure of the ground is equal to or less than the limiting value.

(c) Yielding of Relieving Platform Piles
Verification of yielding in the relieving platform piles is to verify the risk that the stresses acting on the relieving platform piles will exceed the yield stress is equal to or less than the limiting value.

(d) Serviceability of the Cross-section of the Relieving Platform
Verification of serviceability of the relieving platform is to verify the risk that the design bending compressive stresses in the relieving platform will exceed the limiting value of compressive stress is equal to or less than the limiting value.

(e) Cross-sectional Failure of the Relieving Platform
Verification of cross-sectional failure of the relieving platform is to verify the risk that the design cross-sectional forces in the relieving platform will exceed the design cross-sectional resistance is equal to or less than the limiting value.

[Technical Note]

2.8.1 Principles of Performance Verification

(1) The provisions in this chapter may be applied to the performance verification of quaywall with relieving platform that comprises a relieving platform, a sheet pile wall in front of the relieving platform, and relieving platform piles.

(2) Sheet pile quaywall with a relieving platform normally comprise a relieving platform, a sheet pile wall in front of the relieving platform, and relieving platform piles. The relieving platform is in many cases constructed as an L-shaped structure of cast-in-place reinforced concrete and is usually buried under landfill material, but sometimes a box shape platform is used to reduce the weight of the platform and the earthquake forces that act on it see **Fig. 2.8.1** and **2.8.2**.

(3) The performance verification of a quaywall with a relieving platform can be made separately for the sheet piles, the relieving platform, and the relieving platform piles.

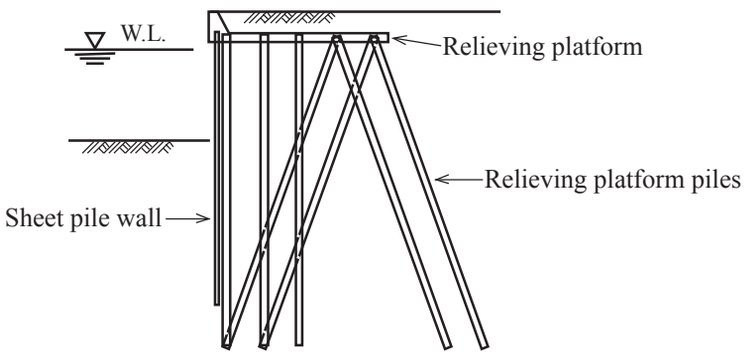

Fig. 2.8.1 Structure of Quaywall with Relieving Platform (L-Shaped Platform)

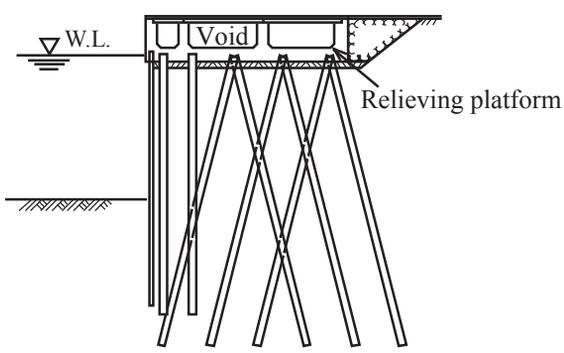

Fig. 2.8.2 Structure of Quaywall with Relieving Platform (Box Shape Platform)

(4) An example of the sequence of performance verification of a quaywall with relieving platform is shown in **Fig. 2.8.3**.

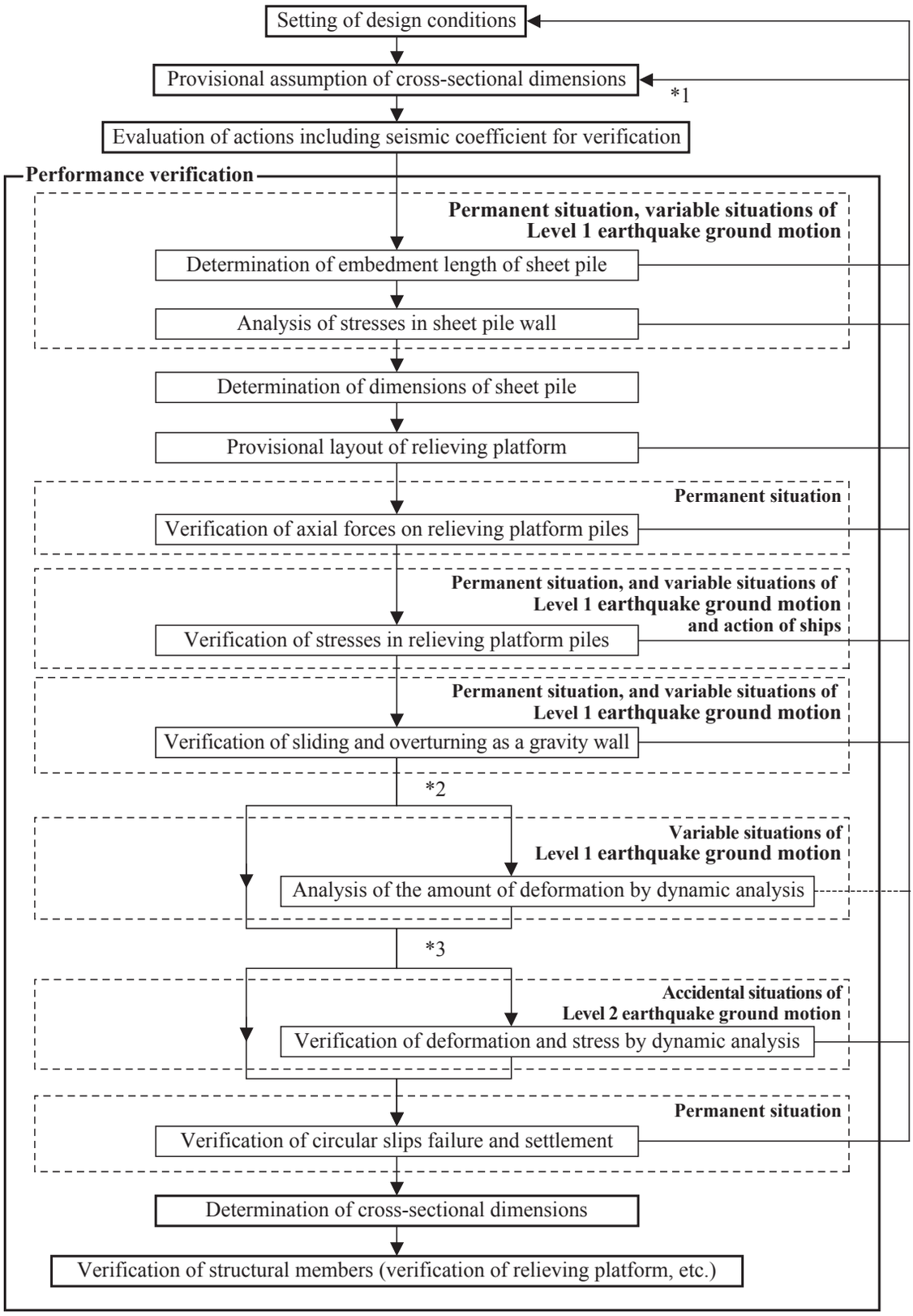

*1: The evaluation of the effect of liquefaction is not shown, so this must be separately considered.
*2: Analysis of the amount of deformation due to Level 1 earthquake ground motion may be carried out by dynamic analysis when necessary. For high earthquake-resistance facilities, analysis of the amount of deformation by dynamic analysis is desirable.
*3: For high earthquake-resistance facilities, verification is carried out for Level 2 earthquake ground motion.

Fig. 2.8.3 Example of the Sequence of Performance Verification of a Quaywall with Relieving Platform

2.8.2 Actions

(1) The earth pressure and residual water pressure acting on sheet piles vary greatly according to structural characteristics. Therefore, they shall be calculated appropriately in consideration of the height and width of the relieving platform as well as support conditions.

(2) When the active failure surface of backfill soil from the intersection between the sea bottom and sheet piles intersects the relieving platform, the active earth pressure acting on the sheet pile wall can be calculated on the assumption that the bottom of the relieving platform is the virtual ground surface and no surcharge is on it as shown in **Fig. 2.8.4**.

(3) The residual water pressure acting on the sheet pile wall should be considered the same as that of the case without a relieving platform. The force to be adopted should be the residual water pressure acting on the range below the bottom level of relieving platform, see **Fig. 2.8.4**.

(4) As for passive earth pressure in front of the embedded section of sheet pile, **2.3 Sheet Pile Quaywalls** can be referred.

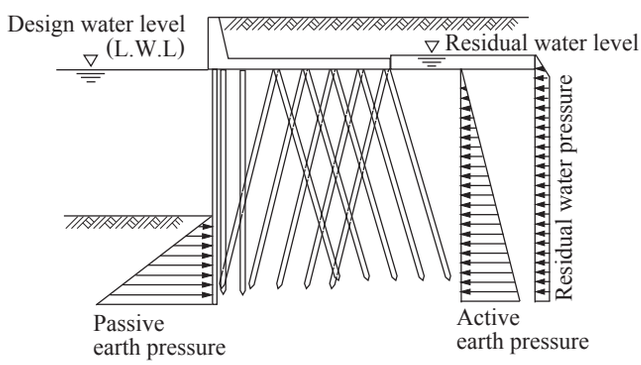

Fig. 2.8.4 Earth Pressure and Residual Water Pressure Acting on Sheet Pile Wall

(5) The characteristic value of seismic coefficient for verification used in the performance verification of quaywalls with relieving platforms for the variable situations associated with Level 1 earthquake ground motion shall be calculated taking the structural characteristics into consideration. For convenience, the characteristic value of seismic coefficient for verification of quaywalls with relieving platforms may be calculated by reference to the **2.2.2(1) Seismic Coefficient for Verification used in Verification of Damage due to Sliding and Overturning of Wall Body and Insufficient Bearing Capacity of Foundations Ground in Variable Situations in Respect of Level 1 Earthquake Ground Motion**, complying with gravity-type quaywalls.

(6) It is not desirable that the width of the relieving platform be shortened to the range where it does not intersect with the active failure surface extending from the seabed surface. However, if the use of a short relieving platform is unavoidable, the following method can be used as the method of calculating the active earth pressure acting on the sheet pile.

As shown in **Fig. 2.8.5**, the earth pressure acting on the sheet pile wall is calculated as the earth pressure acting in the case that there is no relieving platform below the intersection point of the active failure surface drawn from the rear end of the relieving platform and the sheet pile, and as the earth pressure acting in (2) above, above the point of intersection of the natural failure surface during Level 1 earthquake ground motion drawn from the rear end of the relieving platform and the sheet pile. Between these two, it may be assumed that the earth pressure varies linearly.

The design value of the angle α formed between the natural failure surface and the horizontal during an earthquake can generally be obtained from equation (**2.8.1**). In the following equation, the subscript d indicates the design value.

$$\alpha_d = \phi_d - \tan^{-1} k'_{h_d} \tag{2.8.1}$$

where,

ϕ : angle of shearing resistance of the soil (°)

k_h' : apparent seismic coefficient

The design values in the equation may be calculated from the following equation. In the equation, the symbol γ is the partial factor corresponding to its subscript, and the subscripts k and d indicate the characteristic value and

the design value, respectively. Also, the partial factors may all be assumed to be 1.0.

$$\tan\phi_d = \gamma_{\tan\phi}\tan\phi_k$$
$$k'_d = \gamma_{k'}k'_k \qquad (2.8.2)$$

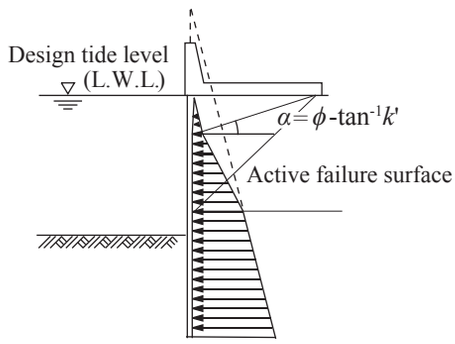

Fig. 2.8.5 Earth Pressure Acting on Sheet Pile with Narrow Relieving Platform

(7) The horizontal force transmitted from the sheet pile wall may be calculated with the same method as that for the reaction force at the tie rod setting point obtained in accordance with **2.3.4 Performance Verification** of **2.3 Sheet Pile Quaywalls** by regarding the bottom elevation of relieving platform as a tie rod setting point.

(8) The tractive force of ships and fender reaction force also act on the relieving platform. These external forces should be considered as necessary.

(9) The external forces transmitted from the sheet pile wall to the relieving platform include the horizontal force and flexural moment. However, the transmission of the flexural moment is ignored for the sake of safety, because the fixing of the sheet piles to the relieving platform may not be rigid enough.

(10) The earth pressure and residual water pressure acting on the back of the relieving platform can be calculated in accordance with **Part II, Chapter 5, 1 Earth Pressure** and **Part II, Chapter 5, 2.1 Residual Water Pressure**. In the calculation of earth pressure, surcharge should be taken into consideration. In the part below the bottom of relieving platform, the difference between action earth pressure acting on the rear and the passive earth pressure acting on the front acts as the active earth pressure down to the depth where the two pressures are balanced. This should be added as shown in **Fig. 2.8.6**. The friction angle of the wall may be taken to be 15° for active earth pressure, and –15° for passive earth pressure.

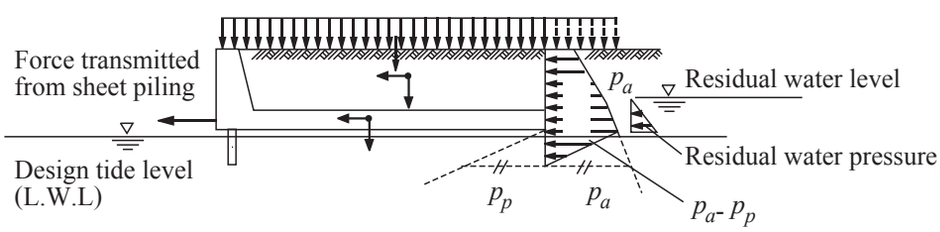

Fig. 2.8.6 External Forces to be Considered for Performance Verification of Relieving Platform

2.8.3 Performance Verification

(1) Performance Verification of Sheet Pile Wall

① The embedded length of sheet piles can be examined by assuming that the joint between the sheet pile wall and relieving platform is a hinge support, replacing the bottom of the relieving platform with a tie rod setting point and applying **2.3 Sheet Pile Quaywalls**.

② Verification of stresses in the sheet pile wall may be carried out in accordance with **2.3 Sheet Piled Quaywalls**, replacing the relieving platform bottom surface with the tie installation point.

③ In addition to the flexural moment due to earth pressure, the flexural moment and vertical force transmitted from the relieving platform act on the sheet piles of a sheet pile wall. Normally the flexural moment transmitted from the relieving platform is not taken into consideration, because it usually acts in a direction opposite to that

of the maximum flexural moment that acts on the sheet piles and thus reduces the maximum flexural moment. Furthermore, the vertical force transmitted from the relieving platform to the sheet pile wall is normally not taken into consideration when the front row of relieving platform piles is driven in as close to the sheet pile wall as possible and this significantly reduces the vertical force acting on the sheet piles.

(2) Performance Verification of the Relieving Platform

A relieving platform should be verified for performance as a continuous beam for both the direction of quaywall alignment and the direction perpendicular to the alignment (see **Fig. 2.8.7)**. Loads should not be distributed in the two directions. When the relieving platform is an L–shaped structure, the upright section should be verified for performance as a cantilever beam supported at the slab section.

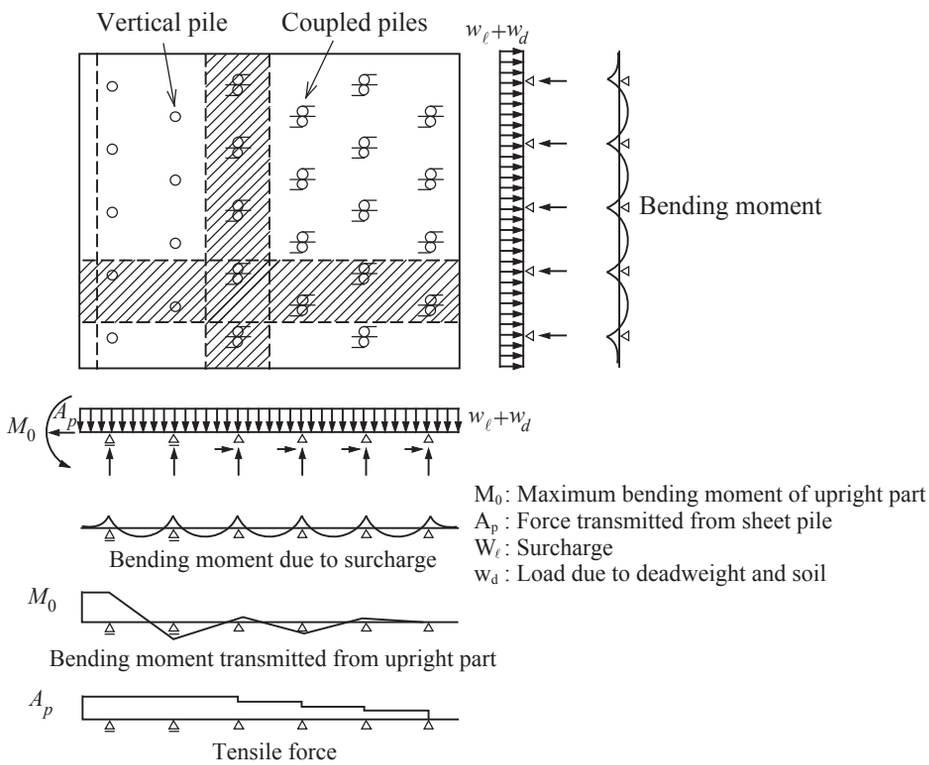

Fig. 2.8.7 Continuous Beam Assumed in Performance Verification of Relieving Platform

(3) Performance Verification of the Relieving Platform Piles

① Performance of relieving platform piles can be verified in accordance with **Part II, Chapter 2, 2.4 Pile Foundations**.

② In principle, relieving platform piles should consist of a combination of coupled piles and vertical piles. The horizontal external force may be borne by the coupled piles only, and the vertical external force may be borne by the vertical piles only. It may be assumed that each of the coupled piles burdens the horizontal force equally.

③ In the design of relieving platform piles, assessment should be made for the most dangerous state of each pile by varying the surcharge, direction of seismic forces, and sea level within the design condition ranges.

④ In calculating the axial load resistance of each of the relieving platform piles, it is desirable to assume that in the ground above the sheet pile active failure surface drawn from the seabed surface, the skin friction does not contribute as the resistance force of the relieving platform piles.

⑤ If it is unavoidable that the relieving platform piles are all composed by vertical piles, when distributing the horizontal force to the vertical piles, normally it is assumed in calculating the resistance force normal to their axes that there is no soil above the sheet pile active failure surface drawn from the seabed surface.

(4) Analysis of the Stability as Gravity-type Wall Structures

① The examination of the stability of a quaywall with relieving platform as a whole can be made by assuming that the quaywall with relieving platform is a kind of gravity-type wall.

② For analyzing the stability of the assumed gravity-type wall structure, refer to **2.2 Gravity-type Quaywalls**. In this case, the passive earth pressure to the front of the sheet pile is considered.

③ A quaywall with relieving platform may be considered as a rectangular shape gravity-type wall defined by a vertical plane containing the rear face of the relieving platform and a horizontal plane containing the bottom ends of the front side batter piles of the coupled piles, as shown in **Fig. 2.8.8**.

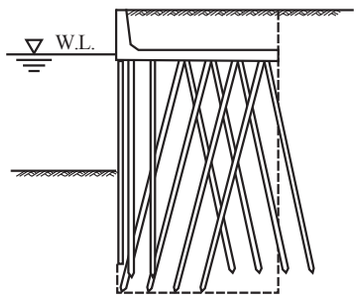

Fig. 2.8.8 Virtual Wall as Gravity-type Wall

(5) Verification of Circular Slip Failure

For analysis of circular slip failure, refer to **Chapter 2, 3 Stability of Slopes**. In this case analysis is carried out for circular slip failure passing under the bottom end of the sheet pile. Also, for setting the tide level, refer to **Part II, Chapter 2, 3 Tide Levels**.

2.9 Cellular-bulkhead Quaywalls with Embedded Sections

Public Notice

Performance Criteria of Cellular-bulkhead Quaywalls with Embedded Sections

Article 52

1 The performance criteria of cellular-bulkhead quaywalls with embedded sections shall be as specified in the subsequent items:

(1) The following criteria shall be satisfied under the permanent action situations in which the dominant action is earth pressure:

(a) The risk of losing the stability due to shear deformation of the structural body shall be equal to or less than the threshold level.

(b) The risk of impairing the integrity of the members of the cellular-bulkhead quaywalls with embedded sections shall be equal to or less than the threshold level.

(2) The following criteria shall be satisfied under the permanent action situation in which the dominant action is earth pressure and under the variable action situation in which the dominant action is Level 1 earthquake ground motions.

(a) The risk of occurrence of sliding of the structural body or failure due to insufficient bearing capacity of the foundation shall be equal to or less than the threshold level.

(b) The risk that the amount of deformation of the top of the cells may exceed the allowable limit of deformation shall be equal to or less than the threshold level.

(3) The risk of occurrence of slip failure in the ground shall be equal to or less than the threshold level under the permanent action situation in which the dominant action is self weight.

(4) The following criteria shall be satisfied by the superstructure of cellular-bulkhead quaywalls with embedded sections under the permanent action situation in which the dominant action is earth pressure and under the variable action situation in which the dominant actions are Level 1 earthquake ground motions, ship berthing, and traction by ships.

(a) The risk that the axial force acting in a pile may exceed the resistance force based on failure of the ground shall be equal to or less than the threshold level.

(b) The risk that the stresses in the piles may exceed the yield stress shall be equal to or less than the threshold level.

(c) The risk of impairing the integrity of the members shall be equal to or less than the threshold level.

2 In addition to the provisions in the preceding paragraph, the performance criteria of placement type cellular-bulkhead quaywalls with embedded sections shall be such that the risk of occurrence of overturning under the variable action situation, in which the dominant action is Level 1 earthquake ground motions, is equal to or less than the threshold level.

[Commentary]

① Cellular-bulkhead Quaywall with Embedded Sections (serviceability)

(a) The performance criteria of cellular-bulkhead quaywall with embedded sections shall be used in accordance with the design situations and the constituent members. Besides this requirement, when necessary the settings of **Public Notice 22 Paragraph 3** (Scouring and Washing Out) and **Article 28 Performance Criteria of Armor Stones and Blocks** shall be applied.

(b) Stability of the Cell Structure and Integrity of Members

1) The stability of the cell structure and the integrity of members shall be in accordance with **Attached Table 39**.

Attached Table 39 Setting of Performance Criteria for Structural Stability of the Cells and the Integrity of the Members of Cellular-bulkhead Quaywall with Embedded Sections and the Design Situations excluding Accidental Situations

Ministerial Ordinance			Public Notice			Performance requirements	Design situation			Verification item	Index of standard limit value
Article	Paragraph	Item	Article	Paragraph	Item		Situation	Dominating action	Non–dominating action		
26	1	2	52	1	1a	Serviceability	Permanent	Earth pressure	Water pressure, surcharges	Shear deformation of wall	Resistance moment
					1b					Yielding of all body	System failure probability under permanent situations of self weight and earth pressure ($P_f = 4.0\times10^{-15}$)
										Arc yielding	System failure probability under permanent situations of self weight and earth pressure ($P_f = 3.1\times10^{-15}$)
										Yielding of points	Design yield stress
					2a		Permanent	Earth pressure	Self weight, water pressure, surcharges	Wall sliding, bearing capacity of foundation ground	System failure probability under permanent situations of earth pressure (High earthquake-resistance facilities: $P_f = 1.0\times10^{-3}$) (Other than high earthquake-resistance facilities: $P_f = 4.0\times10^{-3}$)
							Variable	L1 earthquake ground motion	Self weight, earth pressure, water pressure, surcharge	–	Limit value for sliding Limit value for bearing capacity (Allowable amount of deformation: apply gravity-type quaywalls)
					2b		Permanent	Earth pressure	Water pressure, surcharges	Deformation of cell top	Limit value of deformation
							Variable	L1 earthquake ground motion	Self weight, earth pressure, water pressure, surcharges		
					3		Permanent	Self weight	Water pressure, surcharges	Circular slip failure of ground	System failure probability under permanent situations of earth pressure (High earthquake-resistance facilities: $P_f = 1.0\times10^{-3}$) (Other than high earthquake-resistance facilities: $P_f = 4.0\times10^{-3}$)

2) Shear Deformation of Wall Structures
Verification of the shear deformation of wall structures is to verify that the risk that the deformation moment for shear deformation of the wall structure will exceed the resistance moment is equal to or less than the limiting value.

3) Yielding of Connections
Verification of yielding of joints is to verify that the risk that the tensile stress in the joints between the cell structure and the arc will exceed the yield stress is equal to or less than the limiting value. In the case of steel sheet pile cellular-bulkhead structures, verification shall also be carried out for the tensile strength of the joints of flat type steel sheet pile.

4) Sliding of Wall Structures, Bearing Capacity of Foundation Ground
Verification of sliding of wall structures is to verify that the risk of failure due to sliding of a wall structure is equal to or less than the limit value. Verification of bearing capacity of foundation soils is to verify that the risk of failure due to insufficient bearing capacity of the foundation ground is equal to or less than the limit value.

The setting for sliding of wall structures and bearing capacity of foundation in permanent situations where dominating action is the earth pressure and variable situations where dominating action is Level 1 earthquake ground motion, shall comply with the setting of the **Public Notice**

Article 49 Performance Criteria of Gravity-type Quaywalls.

5) Deformation of the Cell Tops
The limit value of the amount of deformation of the cell tops under the permanent situations where dominating action is the earth pressure and the variable situations where dominating action is Level 1 earthquake ground motion shall be appropriately set based on the envisaged conditions of use of the facility, etc.

6) Circular Slip Failure of the Ground
The setting for circular slip failure of the ground shall comply with the setting of the **Public Notice Article 49 Performance Criteria of Gravity-type Quaywalls**.

(b) Superstructures

1) The setting for superstructures shall be in accordance with **Attached Table 40**.

Attached Table 40 Setting for the Performance Criteria of the Superstructures of Cellular-bulkhead Quaywall with Embedded Sections and Design Situations excluding Accidental Situations

Ministerial Ordinance			Public Notice			Performance requirements	Design situation			Verification item	Index of standard limit value
Article	Paragraph	Item	Article	Paragraph	Item		Situation	Dominating action	Non–dominating action		
26	1	2	52	1	4a	Serviceability	Permanent	Earth pressure	Self weight, water pressure, surcharge	Axial forces acting on superstructure piles*1)	Resistance capacity based on failure of the ground (pushing, pulling)
							Variable	L1 earthquake ground motion Traction of ships	Self weight, earth pressure, water pressure, surcharge		
					4b		Permanent	Earth pressure	Water pressure, surcharge	Yielding of superstructure piles*1)	Design yield stress
							Variable	L1 earthquake ground motion	Self weight, earth pressure, water pressure, surcharge	–	–
					4c		Permanent	Earth pressure	Water pressure, surcharge	Serviceability of superstructure cross-section	Limit value of bending compressive stress (serviceability limit state)
							Variable	L1 earthquake ground motion Berthing and traction of ships	Self weight, earth pressure, water pressure, surcharge	Cross-sectional failure of superstructure	Design cross-sectional resistance (ultimate limit state)

*1) Only for structures having superstructure supporting piles

2) Axial Forces Acting in the Piles of the Superstructure
Verification of axial forces acting on the piles of the superstructure is to verify that the risk that the axial forces acting in the piles of the superstructure will exceed the resistance load based on failure of the ground is equal to or less than the limit value.

3) Yielding of Piles of the Superstructure
Verification of yielding in the piles of the superstructure is to verify that the risk that the stress in the piles of the superstructure will exceed the yield stress is equal to or less than the limit value.

4) Serviceability of the Cross-section of Superstructures
Verification of serviceability of the cross-section of superstructures is to verify that the risk that the design compressive bending stress in the superstructure will exceed the limit value of the compressive stress is equal to or less than the limit value.

5) Cross-sectional Failure of Superstructures
Verification of cross-sectional failure of superstructures is to verify that the risk that the design cross-sectional force in the superstructure will exceed the design cross-sectional resistance is equal to or less than the limit value.

② Placement Type Cellular-bulkhead Quaywalls (Serviceability)

(a) Performance criteria of placement type cellular-bulkhead quaywalls shall comply with the performance criteria of the cellular-bulkhead quaywall with embedded sections, excluding the verification items for deformation of the top of cells, and in addition with **Attached Table 41**.

Attached Table 41 Setting for the Performance Criteria of Placement Type Cellular-bulkhead Quaywalls and the Design Conditions excluding Accidental Situations

Ministerial Ordinance			Public Notice			Performance requirements	Design situation			Verification item	Index of standard limit value
Article	Paragraph	Item	Article	Paragraph	Item		Situation	Dominating action	Non–dominating action		
26	1	2	52	2	–	Serviceability	Variable	L1 earthquake ground motion	Self weight, earth pressure, water pressure, surcharge	Overturning of wall body	Limit value for overturning (allowable amount of deformation of top of quaywall: apply gravity-type quaywalls)

(b) Overturning of Wall Body

The setting regarding overturning of wall body under variable situations where dominating action is Level 1 earthquake ground motion shall comply with the setting of the **Public Notice Article 49 Performance Criteria of Gravity-type Quaywalls**.

[Technical Note]

2.9.1 Fundamentals of Performance Verification

(1) The following is applicable to the performance verification of quaywalls using a steel cellular-bulkhead structure, hereinafter referred to as steel cellular-bulkhead quaywalls, and quaywalls having a cellular-bulkhead structure with embedded sections, hereinafter referred to as the steel cellular-bulkhead quaywalls with embedded sections.

(2) The performance verification method described in this chapter is based on the results of cellular-bulkhead model tests [78), 79), 80), 81)] conducted on a sandy soil ground with an embedded length ratio of 0 to 1.5 and a ratio of equivalent wall width to wall height of 1 to 2.5. For the cases where the embedded length ratio is very small, less than 1/8, the equivalent wall width is very small relative to the wall height, or the quaywall is to be constructed on a cohesive soil ground or ground improved by the sand compaction piles, etc., further examinations such as a dynamic analysis taking into consideration nonlinear characteristics of the ground should be made as required in addition to the examination using the performance verification method described in this section because these cases involve factors that cannot be fully clarified with the method described here.

(3) Examples of the cross-section of a steel cellular-bulkhead quaywall and an embedded–type steel cellular-bulkhead quaywall are shown in **Fig. 2.9.1(a), (b)**.

(4) The approach in **2.9.2 Action**, and **2.9.4 Performance Verification** may be used for simple verification, but it is necessary to be careful when adopting these approaches.

(5) An example of the sequence of performance verification of the cellular-bulkhead quaywall with embedded sections is shown in **Fig. 2.9.2**.

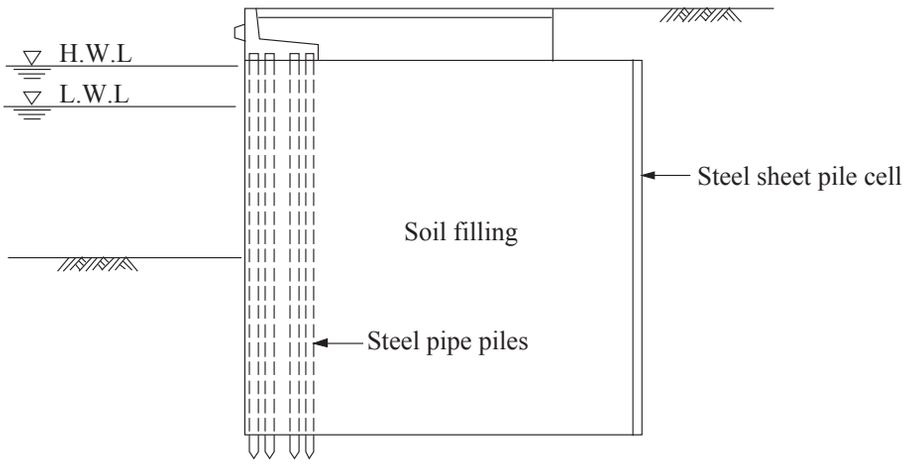

(a) Embedded-type steel cellular-bulkhead quaywall

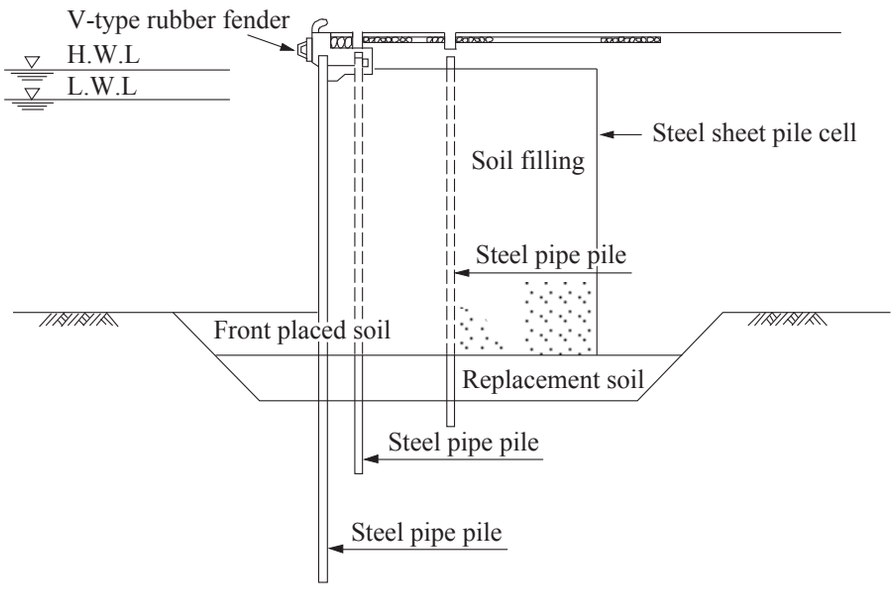

(b) Embedded-type steel cellular-bulkhead quaywall

Fig. 2.9.1 Examples of the Cross-section Cellular-bulkhead Quaywalls with Embedded Sections

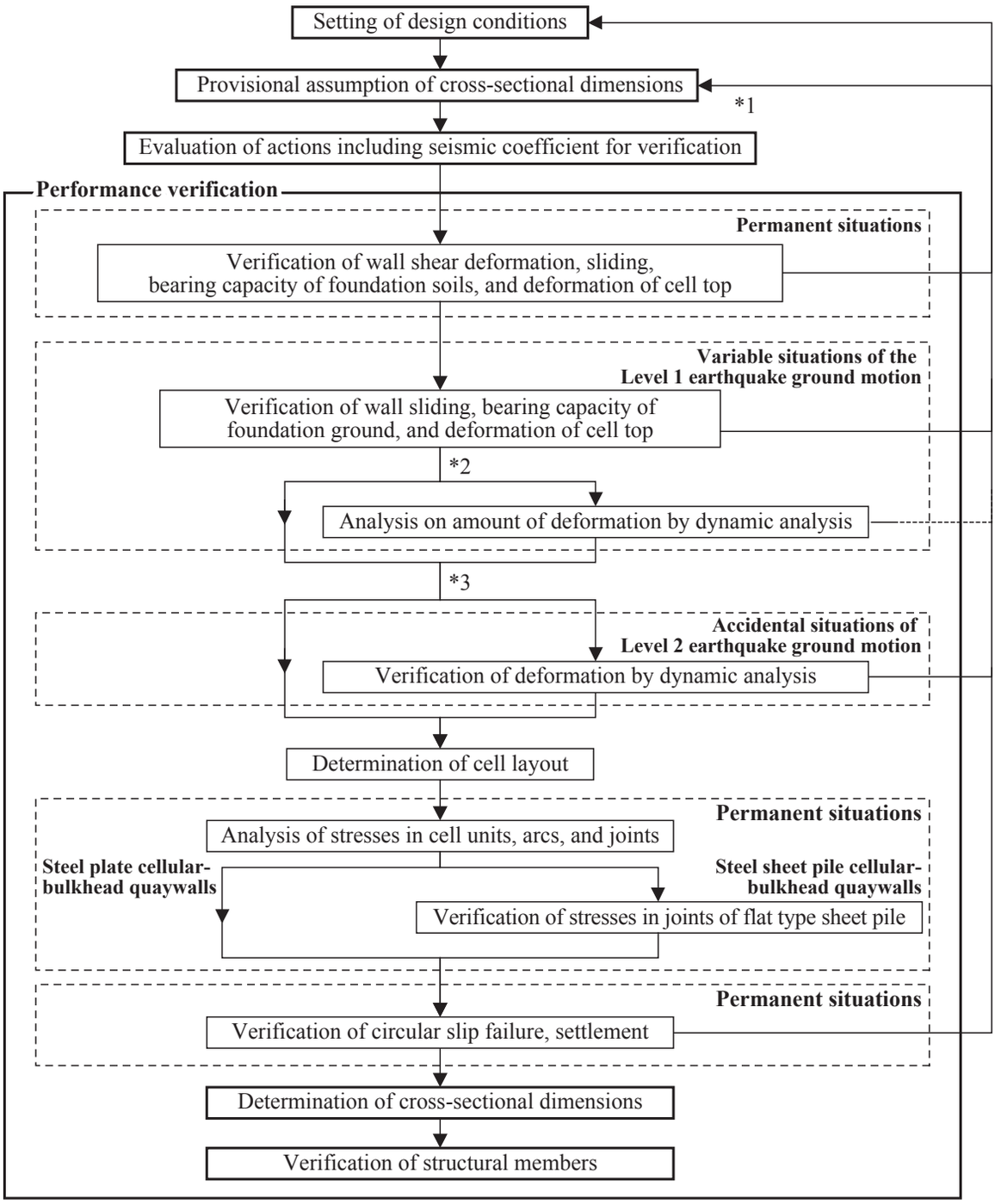

*1: The evaluation of the effect of liquefaction is not shown, so this must be separately considered.
*2: Analysis of the amount of deformation due to Level 1 earthquake ground motion may be carried out by dynamic analysis when necessary. For high earthquake-resistance facilities, analysis of the amount of deformation by dynamic analysis is desirable.
*3: For high earthquake-resistance facilities, verification is carried out for Level 2 earthquake ground motion.

Fig. 2.9.2 Example of the Sequence of Performance Verification of the Cellular-bulkhead Quaywalls with Embedded Sections

(6) It is recommended that the filling material in cells is a sufficient density sand or gravel of good quality. It is not desirable to use a clayey soil as the filling material. When clayey soil is to remain in the cells, it is necessary to make a separate examination because the deformation of the cells may become significantly large.

(7) When a foundation for a crane, shed, or warehouse is to be built within a cell, it is desirable to use foundation piles to transmit the load to the bearing stratum.

2.9.2 Actions

(1) For calculating the action to be considered in the performance verification of embedded–type steel cellular-bulkhead quaywalls with embedded sections, refer to **Part II, Chapter 4, 2 Seismic Action**, **Part II, Chapter 5, 1 Earth Pressure**, **Part II, Chapter 5, 2 Water Pressure**, and **Part II, Chapter 10 Self weight and Surcharges**.

(2) The rear of the wall may be subjected to active earth pressure in the examination of shear deformation of the cell wall body (see **Fig. 2.9.3)**. According to the model tests, it can be understood that the embedded section of the cell is subjected to the action corresponding to the earth pressure at rest because the deformation of the embedded section of the cell is small. According to the results of shaking table tests, the earth pressure acting on this part works as a resisting force against overturning of the wall but acting forces. In the examining the stability of the entire system, therefore, the earth pressure acting on the rear of the wall is normally active earth pressure above the seabed surface, and earth pressure that is generated by surcharge such as backfilling under the seabed surface. The characteristic value of the earth pressure that is generated by surcharge such as backfilling during permanent situation can normally be calculated using equation (**2.9.1**) (see **Fig. 2.9.4)**.

$$p_{ac} = k\left(\sum wh + q\right) \tag{2.9.1}$$

where

p_{ac} : earth pressure acting on the rear of wall below the sea bottom (kN/m^2)
k : coefficient of earth pressure, $k = 0.5$ can be adopted
w : unit weight of each layer of backfilling (kN/m^3)
h : thickness of each layer of backfilling (m)
q : surcharge (kN/m^2)

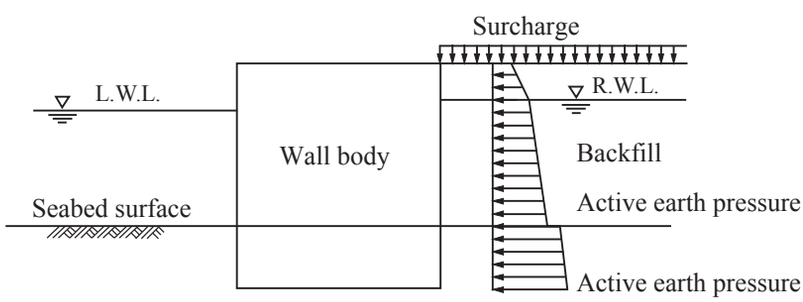

Fig. 2.9.3 Earth Pressure Acting on the Rear of Wall Body for Examination of Shear Deformation

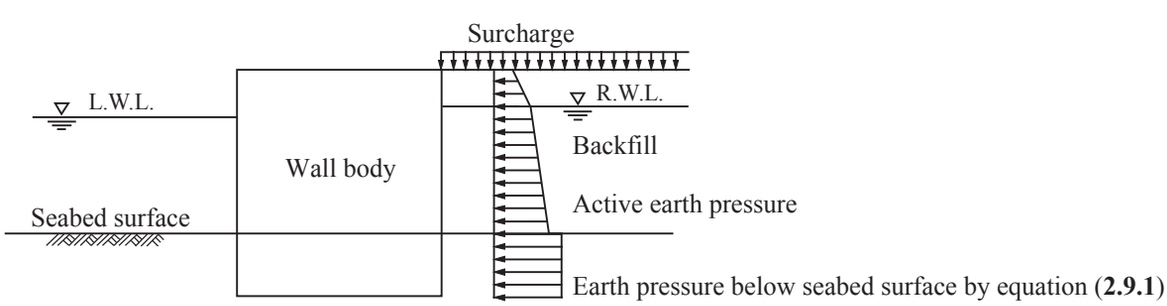

Fig. 2.9.4 Earth Pressure Acting on the Rear of Wall Body for Examination of the Stability as Gravity-type Wall

(3) In principle, the residual water level of the backfilling can be taken at the elevation with the height equivalent to two thirds of the tidal range above the mean monthly–lowest water level, LWL. However, when using a backfilling with low permeability, the residual water level may become higher than this and thus it is desirable to determine the residual water level based on results of investigations of similar structures. The residual water level in the filling material in the cells may be set to the same level as that of the backfilling for the wall body.

(4) Seismic coefficient for verification used in performance verification of the steel cellular-bulkhead quaywalls with embedded sections

The characteristic value of the seismic coefficient for verification used in performance verification of the steel cellular-bulkhead quaywalls with embedded sections under variable situations associated with Level 1 earthquake ground motion and the allowable value of the amount of deformation set corresponding to the seismic coefficient

for verification shall be appropriately calculated taking the structural characteristics into consideration. For the purpose of convenience, the characteristic value of the seismic coefficient for verification and the allowable value of the amount of deformation for steel cellular-bulkhead quaywalls with embedded sections may be set to comply with **2.2 Gravity-type Quaywalls, 2.2.2 (1) Seismic Coefficient for Verification used in Verification of Damage due to Sliding and Overturning of Wall Body and Insufficient Bearing Capacity of Foundation Ground in Variable Situations in respect of Level 1 earthquake ground motion** and ⑧ **(b) Setting of allowable deformation, *Da*=10cm**.

However, it is necessary to be aware that the method described in this document does not necessarily evaluate sufficiently the effect of the embedment of the steel cellular-bulkhead quaywall with embedded sections on the seismic–resistant performance. For details, refer to **Section 2.9.4 (2)** ③ **(f)**.

(5) For the seabed and above, the seismic coefficient to be used in the calculation of the seismic inertia force that acts on the filling material shall be the seismic coefficient for verification. For the part below the sea bottom, this value is reduced linearly in such a way that it becomes zero at 10 m below the seabed. In principle, the seismic inertia force is not considered for the part deeper than that level, see **Fig. 2.9.5**.

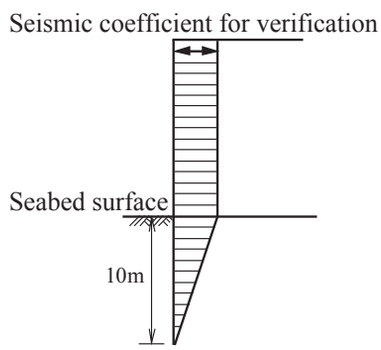

Fig 2.9.5 Inertia Force Acting on Filling

2.9.3 Setting of the Equivalent Wall Width

(1) Equivalent wall width may be used for verifying performance. The equivalent wall width, in this case, shall be the width of a rectangular virtual wall substituted the combination of cells and arc sections.

The equivalent wall width is the width of a rectangular virtual wall body that is used in place of the wall body combined with cells and arc sections to simplify design calculations, see **Fig. 2.9.6**. The virtual wall is defined in such a way that the area of the horizontal cross section of the virtual wall body becomes the same as that of the combined cells and arc sections

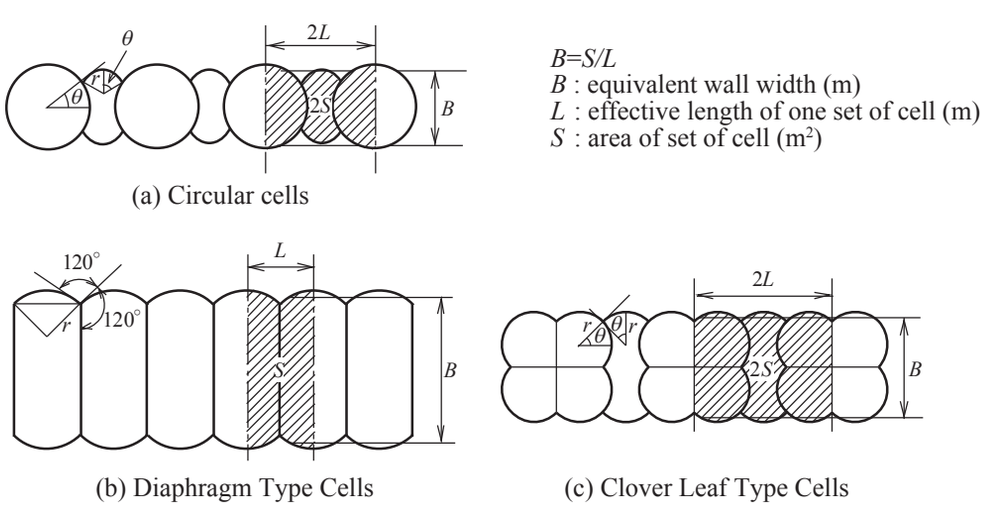

Fig. 2.9.6 Plan View of Cellular-bulkhead Structure and Equivalent Wall Width *B*

(2) The equivalent wall width is normally determined to satisfy the analysis of the shear deformation of the wall structure.

2.9.4 Performance Verification

(1) Analysis of the Shear Deformation of the Wall Structure

① The cell shell and filling of the cellular-bulkhead quaywall usually act as an integrated structure because the filling is constrained in the cell shell. Therefore the deformation of the cell wall body may be ignored relative to its displacement and the overall behavior of the cell wall body may be considered the same as that of a rigid body. This has been verified by model tests in which the cell wall body did not show significant deformation under loads much larger than the external forces that are expected to act on the cell wall body both under permanent situation and variable situation associated with Level 1 earthquake ground motion. In the case of normal ground and filling soil, therefore, it can be understood that shear failure does not occur in the filling. However, when the diameter of the cell is very small or the strength of the filling material is extremely low, it may not be possible to satisfy the assumption that the cell wall body is a rigid body. Therefore it is necessary to make examination of the strength of the filling against shear deformation due to the loads under permanent situation in order to remain the deformation of the cell wall body to a negligible level.

② Normally, it is possible to analyze the shear deformation of the steel cellular-bulkhead quaywalls with equations **(2.9.2)** and **(2.9.3)**, using the resistance moment and the deformation moment of the cell bottom surface, and the resistance moment and the deformation moment of the soil within the cells at the seabed surface. Also, analysis of the shear deformation of the steel cellular-bulkhead quaywalls can be carried out using equation **(2.9.3)**. The subscript d in the equations indicates the design value. For calculation of the design values, refer to ③ **Calculation of deformation moment,** ④ **Calculation of the resistance moment at the bottom of cell**, and ⑤ **Resistance moment of the filling with respect to the seabed**, below. An appropriate value of 1.2 or higher may be used as the structural analysis factor γ_a.

$$M_{r_d} \geq \gamma_a M_{d_d} \tag{2.9.2}$$

$$M'_{r_d} \geq \gamma_a M'_{d_d} \tag{2.9.3}$$

where,

M_r : resistance moment of the cell bottom surface (kN·m/m)
M_d : deformation moment of the cell bottom surface (kN·m/m)
M'_r : resistance moment of filling soil at the seabed surface (kN·m/m)
M'_d : deformation moment at the seabed surface (kN·m/m)
γ_a : structural analysis factor

③ Calculation of deformation moment

(a) The deformation moment to be used in the performance verification of steel sheet pile cellular-bulkhead quaywalls shall be the moment at the bottom of the cell or the seabed due to external forces such as active and passive earth pressures and residual water pressure above the cell bottom or the seabed. The deformation moment for steel cellular-bulkhead quaywalls shall be the moment at the seabed due to external forces such as active and passive earth pressures and residual water pressure above the seabed.

(b) In the calculation of deformation moment, earth pressure is considered only in terms of the horizontal component. The vertical component is not taken into consideration. The vertical force of the surcharge is not taken into consideration in the calculation of deformation moment. However, the surcharge is taken into consideration in the calculation of active earth pressure, see **Fig. 2.9.7**.

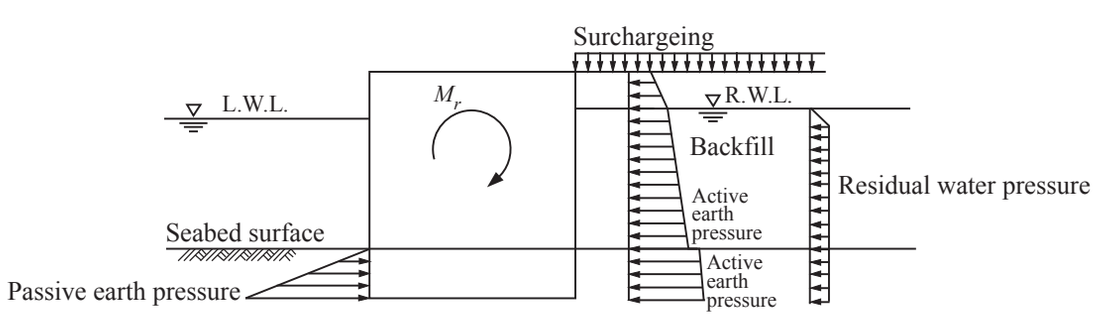

Fig. 2.9.7 Loads and Resisting Forces to be taken into consideration in the Examination of Shear Deformation

④ Calculation of resistance moment at the bottom of cell

(a) The resistance moment at the bottom of cell shall be calculated appropriately in consideration of the structural characteristics of the cell and deformation of the wall.

(b) The result of model tests 78) shows that the resistance moment with respect to the wall bottom may be increased by increasing the embedded length ratio D/H, see **Fig. 2.9.8**. This can be calculated using equation (2.9.4).

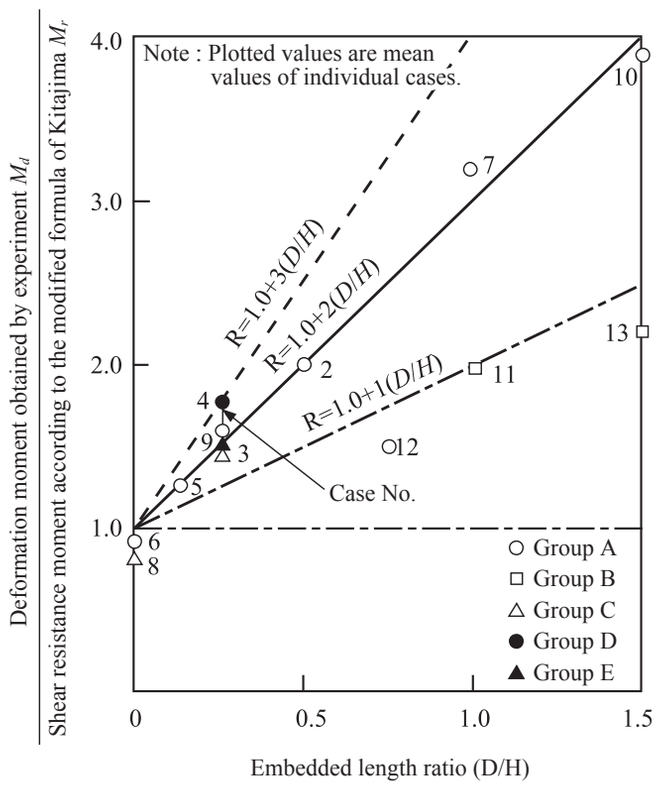

Fig. 2.9.8 Relationship between Resistance Moment and Embedded Length Ratio

$$M_{r_d} = \left(M_{r0_d} + M_{rs_d}\right)\left(1 + \alpha \frac{D}{H}\right) \tag{2.9.4}$$

where

M_r : resistance moment with respect to cell bottom (kN·m/m)
M_{r0} : resistance moment of the filling with respect to cell bottom (kN·m/m)
M_{rs} : resistance moment due to the friction force of sheet pile joints, with respect to cell bottom (kN·m/m)
D : embedded length (m)
H : height from wall bottom to wall top (m) (see **Fig. 2.9.9**)
α : required additional rate against the embedded length ratio (D/H)

For the required additional rate α, it is recommended to use 1.0, which is close to the lowest value found in the test results shown in **Fig. 2.9.8**, because the equation given above has been derived based on tests and not fully clarified theoretically.

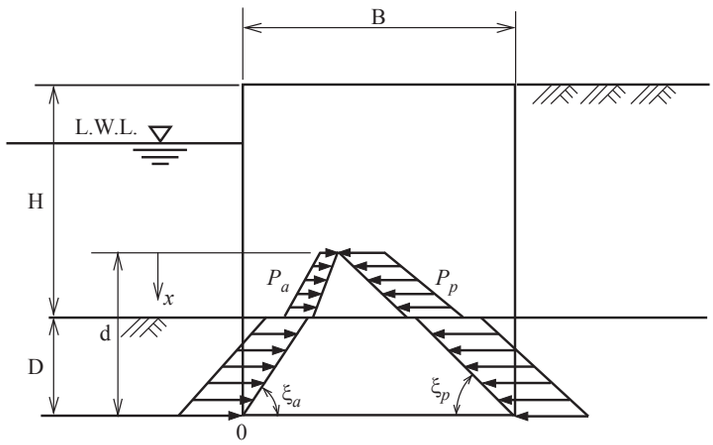

Fig. 2.9.9 Assumed shear surface of filling soil

(c) Equation for Calculating the Resistance moment of Filling

In the determination of the resistance moment of filling at the bottom of the cell, it is assumed that an active failure surface is generated from the front of the bottom of the cell and a passive failure surface is generated from the rear, and that the active and passive earth pressures act on the respective failure surfaces, as shown in **Fig. 2.9.9**. The active and passive failure angles as well as the active and passive earth pressures may be calculated using the following Rankine's equations. The subscript *d* in the equation indicates the design value.

$$\left.\begin{aligned}
&\text{active failure surface } \zeta_{a_d} = \frac{\pi}{4} + \frac{\phi_d}{2} \\
&\text{passive failure surface } \zeta_{p_d} = \frac{\pi}{4} - \frac{\phi_d}{2} \\
&\text{active earth pressure } P_{a_d} = K_a w_d h,\ K_a = \frac{1-\sin\phi_d}{1+\sin\phi_d} \\
&\text{passive earth pressure } P_{p_d} = K_p w_d h,\ K_p = \frac{1+\sin\phi_d}{1-\sin\phi_d}
\end{aligned}\right\} \tag{2.9.5}$$

where

ϕ : angle of shear resistance of filling (°)
w : unit weight of soil (kN/m³)
h : thickness of soil layer (m)

The design values in equation **(2.9.5)** may be calculated using the equation **below**.

$$w_{0d} = \gamma_{w_0} w_{0k} \quad , \quad w_{id} = \gamma_{w_i} w_{ik} \tag{2.9.6}$$

The moment caused by the earth pressure acting on the shear surface may be calculated by using equation **(2.9.7)** see **Fig. 2.9.9**.

$$M_{rsd} = \frac{1}{6} w_{0d} R_{sd} H_{sd}{}^3 \tag{2.9.7}$$

When the geotechnical constants of the ground and those of the filling differ, equation **(2.9.7)** becomes complex as the failure angle and the earth pressure level vary from one soil layer to another. However, when there is no significant difference in the internal friction angle between the ground and filling, or when the embedded length ratio is large and the failure surfaces do not reach the filling portion, the following simplified equation may be used. In the equations below, subscript *d* stands for the design value.

$$M_{r0_d} = \frac{1}{6} w_{0_d} R_{0_d} H_{0_d}{}^3 \tag{2.9.8}$$

$$R_{0_d} = \frac{2}{3} \nu_{0_d}{}^2 \left(3 - \nu_{0_d} \cos\phi_d\right) \tan\phi_d \sin\phi_d \tag{2.9.9}$$

where

w_0 : equivalent unit weight of filling, unit weight of the filling which assumes that the unit weight is

uniform throughout the filling; normally w_{0k}=10 kN/m³ is used.

H_{0d} : equivalent wall height measured from the bottom of cell. The equivalent wall height is employed to calculate the resistance moment due to the filling by using the equivalent unit weight of the filling. It is calculated by equation **(2.9.10)**.

$$H_{0d} = \frac{1}{w_{0d}} \sum_i w_{id} h_i \tag{2.9.10}$$

w_i : unit weight of the i–th layer of filling (kN/m³)

h_i : thickness of the i–th layer, from cell bottom to top of quaywall (m)

$$v_{0d} = B/H_{0d}$$

B : equivalent wall width (m)

The design values in the equation may be obtained using the following equation.

$$w_{0d} = \gamma_{w_0} w_{0k} \quad , \quad w_{id} = \gamma_{w_i} w_{ik} \tag{2.9.11}$$

All the partial factors used in calculating the resistance moment of the filling soil may be taken to be 1.0.

(d) Equation for Calculating Resistance moment due to Friction Force of Joints of Sheet Piles

The resistance moment due to friction force of joints is calculated as follows. In the equations below, subscript d stands for the design value.

$$M_{rsd} = \frac{1}{6} w_{0d} R_{sd} H_{sd}^{\ 3} \tag{2.9.12}$$

$$R_{sd} = \frac{3}{2} v_{sd} \quad f \quad \tan\phi_d \tag{2.9.13}$$

where

H_s : The equivalent wall height employed to calculate the resistance moment due to the friction force between the sheet pile joints when the equivalent unit weight of the filling is used. It is evaluated using equation **(2.9.14)** so that the resultant force of the distributed earth pressure in diagram (a) becomes equal to that of (b) in **Fig. 2.9.10**. In this calculation, 0.5tanϕ can be used as the coefficient of earth pressure of the filling.

$$H_{sd} = 2\sqrt{\frac{\sum P_{id}}{w_{0d} \tan\phi_d}} \tag{2.9.14}$$

P_i : resultant earth pressure of the i–th layer of filling (kN/m)

in this case, surcharge is ignored.

w_0 : equivalent unit weight of filling (kN/m³)

ϕ : angle of shear resistance of filling (º)

$$v_{sd} = B/H_{sd}$$

B : equivalent wall width (m)

f : coefficient of friction between sheet pile joints; usually 0.3 is used.

The design value in the equation can be calculated using the following equation:

$$w_{0d} = \gamma_{w_0} w_{0k} \quad , \quad \tan\phi_d = \gamma_{\tan\phi} \tan\phi_k \tag{2.9.15}$$

Note that all partial factors used in the equation for calculating resistance moment due to friction force of the joints can be set at 1.00.

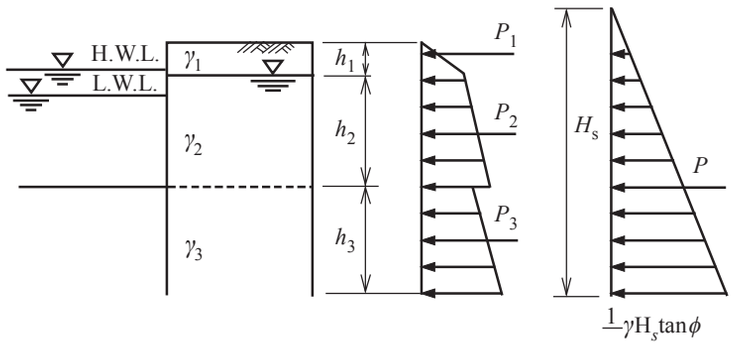

(a) Earth pressure distribution diagram

(b) Converted earth pressure distribution diagram

Fig. 2.9.10 Equivalent Wall Height

⑤ Resistance moment of the filling with respect to the seabed

(a) The resistance moment with respect to the seabed should be calculated appropriately taking into consideration the structural characteristics of the cell and the deformation of the wall.

(b) In the calculation of the resistance moment of the filling with respect to the seabed, equations **(2.9.16)** and **(2.9.17)** may be used.

$$M'_{rd} = \frac{1}{6} w_{0d} R_{0d} H'^{3}_{0d} \tag{2.9.16}$$

$$R_{0}'_{d} = v_{0}'^{2}_{d} (3 - v_{0}'_{d} \cos\phi') \sin\phi' \tag{2.9.17}$$

where

M_r' : resistance moment of sheet pile cell with respect to seabed (kN·m/m)

H_0' : equivalent wall height is employed to calculate the resistance moment due to the filling by using the equivalent unit weight of the filling. It is evaluated by means of equation (**2.9.18**).

$$H_{0}'_{d} = \frac{1}{w_{0d}} \sum_{i} w'_{id} h'_{i} \tag{2.9.18}$$

w'_i : unit weight of the filling of the i–th layer above sea bottom (kN/m^3)

h'_i : thickness of the i–th layer above seabed between seabed and top of quaywall (m)

$v_0' = B/H_0'$

ϕ' : angle of shear resistance of the filling above seabed (º)

The design value in the equation can be calculated using the following equation:

$$w_{0d} = \gamma_{w_0} w_{0k} \quad , \quad w'_{id} = \gamma_{w'_i} w'_{ik} \tag{2.9.19}$$

Note that all partial factors used in the equation for calculating resisting of the filling with respect to the seabed can be set at 1.00.

⑥ Increasing the strength of the filling enhances the rigidity of the cell wall. Therefore, improvement work of filling is effective in increasing the stability of the cell wall.

(2) Calculation of the amount of deformation of wall structures under permanent situations and variable situations associated with Level 1 earthquake ground motion may be carried out based on the following items.

① General

(a) In the examination of the stability of the wall as a whole, the subgrade reaction generated against the load and the displacement of the wall are calculated by considering the wall as a rigid body elastically supported by the ground.

(b) Within the elastic range of the ground, the subgrade reaction force is calculated as the product of the modulus of subgrade reaction and the displacement. Here it is considered that the stability of the wall as a gravity wall is obtained when the subgrade reaction force and the displacement of the wall do not exceed the respective

allowable limits.

② Modulus of subgrade reaction

(a) The modulus of subgrade reaction includes the modulus of horizontal subgrade reaction, the modulus of vertical subgrade reaction, and the horizontal shear modulus at the bottom of cell.

(b) The modulus of subgrade reaction may be calculated as below, based on the results of soil investigation:

1) Modulus of horizontal subgrade reaction
Modulus of horizontal subgrade reaction may be calculated by referring to Yokoyama's diagram [82)] shown in **2.4.5 Static Maximum Lateral Resistance of Piles** in **Chapter 2, 2.4 Pile Foundations**.

$$k_{CH} = 2N \tag{2.9.23}$$

where
k_{CH} : horizontal subgrade reaction coefficient (N/cm^3)
N : N-value

When the ground consists of the strata of different characteristics, the modulus of horizontal subgrade reaction should be calculated for each stratum.

2) Modulus of vertical subgrade reaction
For the modulus of vertical subgrade reaction at the cell bottom, the same value as the modulus of horizontal subgrade reaction at the cell bottom can be used. When the ground consists of the strata of different characteristics, the modulus of vertical subgrade reaction shall correspond to the stratum at the cell bottom. However, when there is an extremely soft stratum below the cell bottom, it is necessary to give careful consideration to its effects.

3) Horizontal shear modulus
The horizontal shear modulus at the wall bottom may be calculated by equation **(2.9.24)** using the modulus of vertical subgrade reaction.

$$k_s = \lambda k_v \tag{2.9.24}$$

where
k_s : horizontal shear modulus (N/cm^3)
λ : ratio of the horizontal shear modulus to the modulus of vertical subgrade reaction
k_v : modulus of vertical subgrade reaction (N/cm^3)

Past studies suggest the use of λ values in the range of 1/2 to 1/5 [83), 84)]. In the case of steel sheet pile cellular bulkhead however, it is considered that the value of λ may be set as about 1/3.

③ Calculation of subgrade reaction and wall displacement

(a) The subgrade reaction acting on the embedded part of steel sheet pile cellular-bulkhead and the wall displacement can be calculated on the assumption that the wall subject to the external forces is supported by the horizontal subgrade reaction, vertical subgrade reaction and horizontal shear reaction at the bottom of wall, and vertical frictional force along the front and rear of the wall.

(b) Subgrade reaction

1) Horizontal subgrade reaction
Horizontal subgrade reaction may be calculated by equation **(2.9.25)**, but this should not exceed the passive earth pressure intensity calculated in accordance with **Part II, Chapter 5, 1 Earth Pressure** to prevent the yielding of the ground. The angle of wall friction used to calculate passive earth pressure can basically be taken at –15°. **Fig.2.9.12** illustrates the distribution of subgrade reaction of a sample case in which the subgrade reaction reaches the passive earth pressure up to a certain depth.

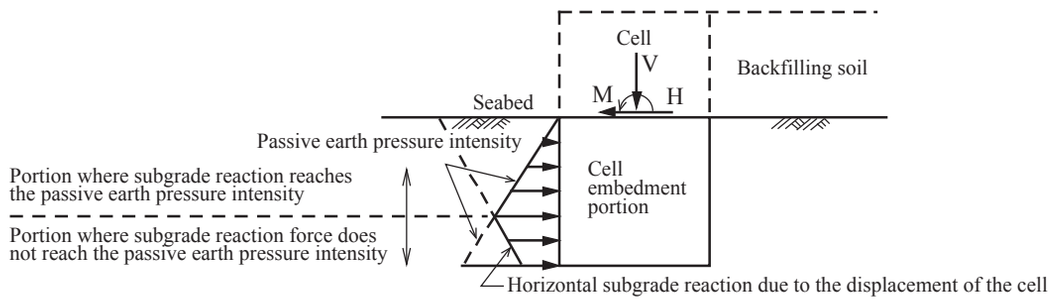

Fig. 2.9.12 Example of Distribution of Horizontal Subgrade Reaction

2) Vertical subgrade reaction
The vertical subgrade reaction at the cell bottom acts in a trapezoidal or triangular distribution. It should be assumed that no tensile stress is generated.

(c) Vertical frictional force
It should be assumed that vertical frictional force acts on the front and rear of the wall and is calculated as the product of the horizontal earth pressure or subgrade reaction force and tanδ, where δ denotes the angle of wall friction.

(d) Distribution of external forces
Fig.2.9.13 shows standard distribution patterns of the external forces acting on steel sheet pile cellular-bulkhead quaywall.

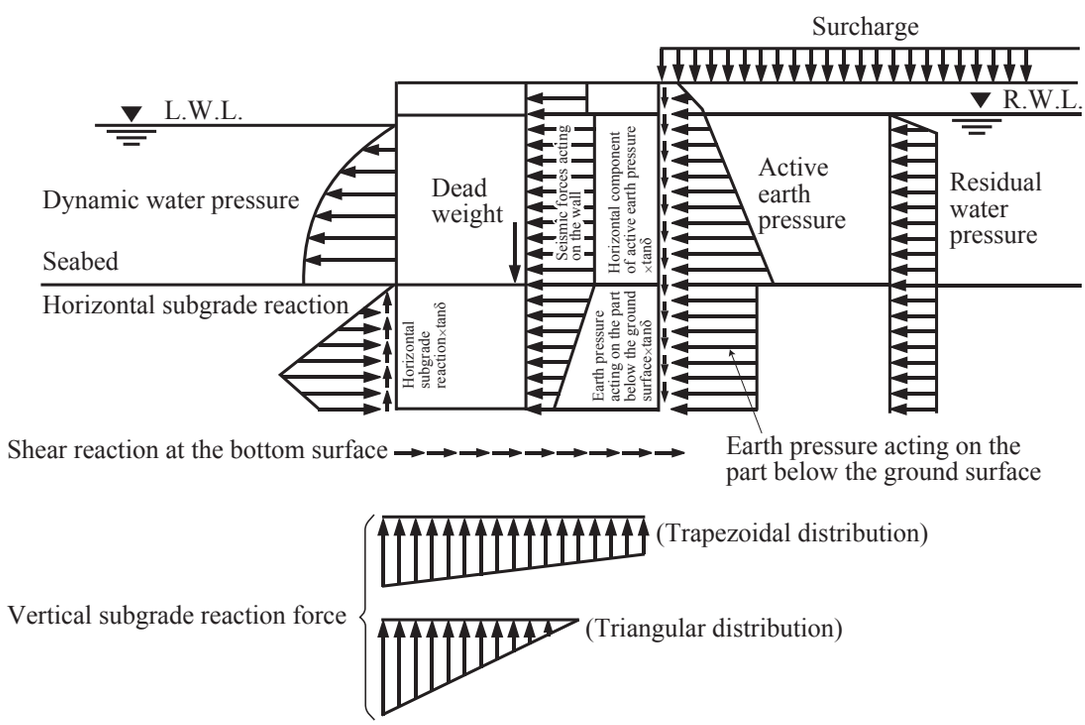

Fig. 2.9.13 Distribution Patterns of External Forces Acting on Steel Sheet Pile Cellular-bulkhead Quaywall

(e) Displacement modes of cell
As shown in **Fig. 2.9.14**, it is assumed that the cell wall rotates around its center of rotation O, which is horizontally away from the center axis of the cell by the distance *e* and vertically away from the seabed by the depth *h*. When the center of rotation is located inside the cell, the horizontal subgrade reaction is generated in the rear of the wall for the part below the center of rotation.

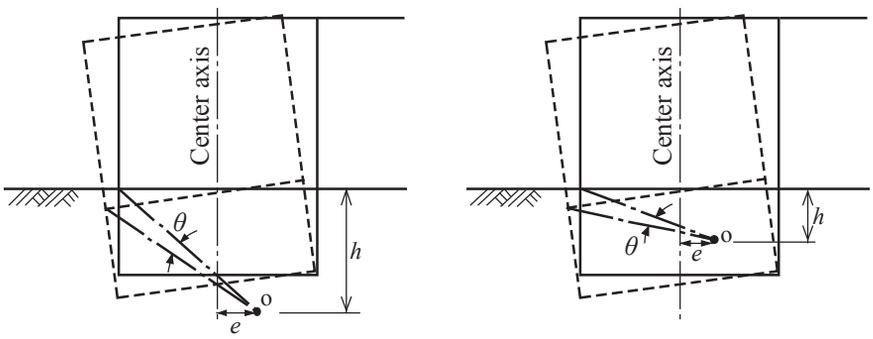

(a) When the center of rotation is located outside the cell body

(b) When the center of rotation is located inside the cell body

Fig. 2.9.14 Displacement Modes of Cell

(f) Equation for calculating subgrade reaction and wall displacement

Figure 2.9.15 shows a calculation model for a case in which horizontal force, vertical force, and moment act at the intersection of the ground surface and the center axis of the cell wall and the ground comprises *n* layers of soil. Equations for calculating the subgrade reaction and cell wall displacement of the model shown in **Fig. 2.9.15** are as follows: This method does not necessarily accurately calculate the displacement during an earthquake, so caution is needed. In other words, if the embedment length is increased to improve the seismic–resistant performance, it has been pointed out that the following methods can over–evaluate the deformation in seismic response analysis.

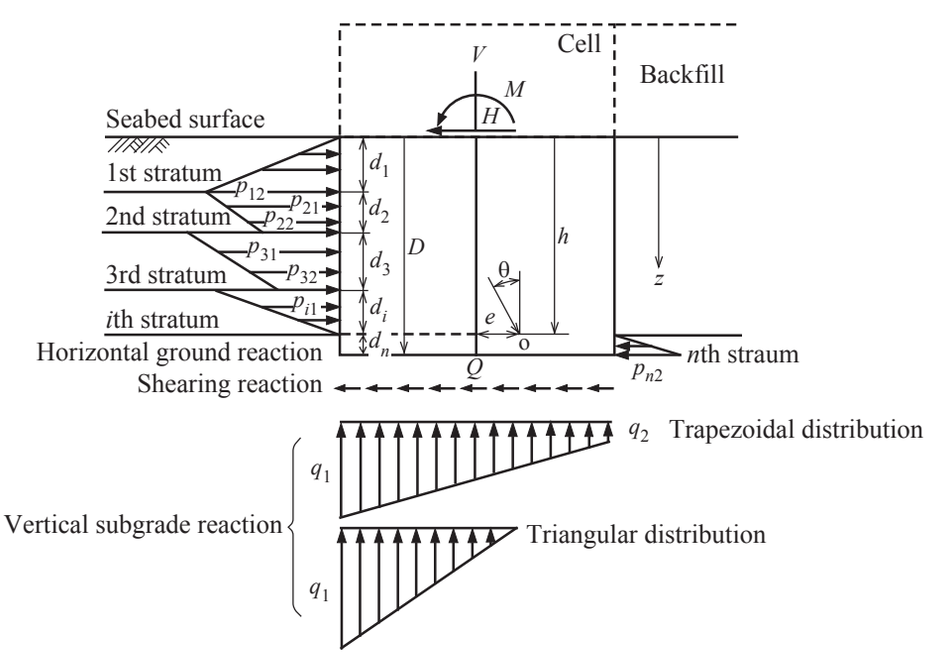

Fig. 2.9.15 Calculation Model

1) When the vertical subgrade reaction acts in a trapezoidal distribution

i) Horizontal subgrade reaction (kN/m2)

$$\left.\begin{aligned}
p_{12} &= k_{CH_1}\left(h-d_1\right)\theta \\
p_{21} &= k_{CH_2}\left(h-d_1\right)\theta \\
p_{22} &= k_{CH_2}\left(h-d_1-d_2\right)\theta \\
&\vdots \\
p_{i1} &= k_{CH_i}\left(h-\sum_{j=1}^{i-1} d_j\right)\theta \\
p_{i2} &= k_{CH_i}\left(h-\sum_{j=1}^{i} d_j\right)\theta \\
&\vdots \\
p_{n1} &= k_{CH_n}\left(h-\sum_{j=1}^{n-1} d_j\right)\theta \\
p_{n2} &= k_{CH_n}\left(h-\sum_{j=1}^{n} d_j\right)\theta
\end{aligned}\right\} \tag{2.9.25}$$

ii.) Vertical subgrade reaction (kN/m2)

$$\left.\begin{aligned}
q_1 &= k_v\left(e+B/2\right)\theta \\
q_2 &= k_v\left(e-B/2\right)\theta
\end{aligned}\right\} \tag{2.9.26}$$

iii) Shear reaction force that acts at the wall bottom (kN/m)

$$Q = k_s\left(h-D\right)\theta A \tag{2.9.27}$$

iv) Horizontal displacement of the wall (m)

$$\delta = \left(h-z\right)\theta \tag{2.9.28}$$

v) Angle of wall rotation (º)

$$\theta = \frac{MK_2 + HK_3}{K_1K_4 - K_2K_3} \tag{2.9.29}$$

vi) Depth of the center of wall rotation (m)

$$h = \frac{MK_2 + HK_4}{MK_1 + HK_3} \tag{2.9.30}$$

vii) Distance from the wall center axis to the center of rotation of the wall (m)

$$e = \frac{1}{k_v A}\left\{\frac{V}{\theta} - h\sum_{i=1}^{n} k_{CH_i} d_i \tan\left|\delta_i\right| + \sum_{i=1}^{n} k_{CH_i} d_i \left(\sum_{j-1}^{i-1} d + \frac{d_i}{2}\right)\tan\left|\delta_i\right|\right\} \tag{2.9.31}$$

where

$$K_1 = \sum_{i=1}^{n} k_{CH_i} d_i + k_s A$$

$$K_2 = \sum_{i=1}^{n}\left\{k_{CH_i} d_i \left(\sum_{j=1}^{i-1} d_j + \frac{d_i}{2}\right)\right\} + k_s AD$$

$$K_3 = \sum_{i=1}^{n}\left\{k_{CH_i} d_i \left(\sum_{j=1}^{i-1} d_j + \frac{d_i}{2} + \frac{B}{2}\tan\delta_i\right)\right\} + k_s AD$$

$$K_4 = \sum_{i=1}^{n}\left\{k_{CH_i} d_i \left(\frac{d_i^2}{3} + \sum_{j=1}^{i-1} d_j \sum_{j=1}^{i} d_j + \frac{B}{2}\left(\sum_{j=1}^{i-1} d_j + \frac{d_i}{2}\right)\tan\delta_i\right)\right\} + k_s AD^2 + \frac{1}{12} k_v A^3$$

The angle of wall friction δ is negative for strata whose horizontal subgrade reaction force acts on the front of the wall, and positive for strata whose horizontal subgrade reaction force acts on the rear of the wall.

2) When the vertical subgrade reaction acts in a triangular distribution
The horizontal subgrade reaction, horizontal wall displacement, angle of rotation, and depth of the center of rotation are expressed in the same form as those in 1).

i) Vertical subgrade reaction (kN/m²)

$$q_{1k} = k_v\left(e + \frac{B}{2}\right)\theta \tag{2.9.32}$$

ii) Shear reaction that acts at the wall bottom (kN/m)

$$Q_k = k_s(h - D)\theta A' \tag{2.9.33}$$

where

$$A' = e + \frac{B}{2}$$

iii) Distance between the wall center axis and the center of rotation of the wall (m)

$$e = \sqrt{\frac{2}{k_v}\left\{\frac{V}{\theta} - h\sum k_{CH_i} d_i \left|\delta_i\right| + \sum k_{CH_i} d_i \left(\sum d_j + \frac{d_i}{2}\right)\tan\left|\delta_i\right|\right\}} - \frac{B}{2} \tag{2.9.34}$$

where

$$K_1 = \sum_{i\ 1}^{n} k_{CH_i} d_i + k_s A'$$

$$K_2 = \sum_{i=1}^{n}\left\{k_{CH_i} d_i \left(\sum_{j=1}^{i-1} d_j + \frac{d_i}{2}\right)\right\} + k_s A' D$$

$$K_3 = \sum_{i=1}^{n}\left\{k_{CH_i} d_i \left(\sum_{j=1}^{i-1} d_j + \frac{d_i}{2} + \frac{B}{2}\tan\delta_i\right)\right\} + k_s A' D$$

$$K_4 = \sum_{i=1}^{n}\left\{k_{CH_i} d_i \left(\frac{d_i^2}{3} + \sum_{j=1}^{i-1} d_j \sum_{j=1}^{i} d_j + \frac{B}{2}\left(\sum_{j=1}^{i-1} d_j + \frac{d_i}{2}\right)\tan\delta_i\right)\right\}$$
$$+ k_s A' D^2 + \frac{1}{6} k_v A'^2 \left(B - e\right)$$

The angle of wall friction δ should be negative for strata whose horizontal subgrade reaction acts on the front of the wall, and positive for strata whose horizontal subgrade reaction acts on the rear of the wall.
The notations used in equations in 1) and 2) are as follows:

V : vertical force acting on the wall (kN/m)
H : horizontal force acting on the wall (kN/m)
M : moment acting on the center of the wall at the level of ground surface (kN·m/m)

Provided external forces that act on the wall are those for the unit length in the direction along the face line of wall

D : embedded length (m)
d_i : thickness of each soil layer of the embedded ground (m)
B : equivalent width (m)
k_{CHi} : modulus of horizontal subgrade reaction of each layer of the embedded ground (kN/m³)
k_v : modulus of vertical subgrade reaction at wall bottom (kN/m³)
k_s : horizontal shear modulus at wall bottom (kN/m³)
A : area of wall bottom per unit length of the wall in the direction face line (m²/m)
A' : area of wall bottom per unit length of the wall in the direction of face line, when the value of vertical subgrade reaction is positive (m²/m)

④ Verification of the amount of deformation, tilt angle of wall structures
The allowable value of the amount of deformation, tilt angle, of wall structures is set by reference to relationships between the amount of deformation of the tops and the amount of damage obtained from earthquake damage

reports from the past.[87] It is verified that the amount of deformation of the wall structure, tilt angle, calculated by the method described above is equal to or less than the allowable value. It is necessary to be aware that the allowable amount of deformation of the wall structure indicated here is different from the allowable amount of deformation indicated in **2.9.2(4) Seismic Coefficient for Verification used in Performance Verification of the Steel Cellular-bulkhead Quaywalls with Embedded Section**. In other words, the allowable amount of deformation indicated in **2.9.2(4)** is a value that includes the deformation of the cell wall structure and the deformation of the soils below the cell wall structure. However, the amount of deformation and tilt angle of the wall structure indicated here is the amount of deformation based on the tilting of the cell wall structure, and is a separately calculated value from the viewpoint of berthing performance.

(3) Analysis of Bearing Capacity of Grounds

For the analysis of the vertical bearing capacity of the grounds at the position of the bottom surface of the wall structure, refer to **Chapter 2, 2.2 Shallow Spread Foundations, 2.2.5 Bearing Capacity for Eccentric and Inclined Actions**.

(4) Examination against Sliding of Wall

① For the examination of wall stability against sliding, refer to the examination on wall sliding in **2.2 Gravity-type Quaywalls**.

② Sliding can be examined using equation **(2.9.35)**. In this equation, γ represents the partial factor for its subscript, and subscripts d and k respectively stand for the design value and the characteristic value.

$$\left(W_d + P_{vd}\right)\tan\phi_d \geq \gamma_a k_s \delta b \tag{2.9.35}$$

where

W : weight of the wall (kN/m)
P_v : vertical component of earth pressure acting on the front and rear of the wall (kN/m)
ϕ : angle of shear resistance of the soil at wall bottom (º)
k_s : horizontal shear modulus at cell bottom (kN/m2)
δ : cell bottom displacement (m)
b : distribution of vertical subgrade reaction (m)
γ_a : structural analysis factor

The design values in the equation can be calculated using equations below:

$$W_d = \gamma_W W_k\,, \quad P_{vd} = \gamma_{P_v} P_{vk}\,, \quad \tan\phi_d = \gamma_{\tan\phi}\tan\phi_k \tag{2.9.36}$$

③ The vertical components of the earth pressure acting on the front and rear of the wall that should be taken into consideration include (a) the vertical component of the active earth pressure, (b) the friction force due to the earth pressure below the ground surface, (c) the vertical component of the passive earth pressure, and (d) the vertical component of subgrade reaction. The vertical component of earth pressure is considered a positive force when it acts in the same direction as that of the wall weight.

④ When the internal friction angle of the soil above the wall bottom is different from that below the wall bottom, it is recommended to use the smaller value as the internal friction angle at the wall bottom.

(5) Verification of Stability against Circular Slip Failure

When the ground is soft, examination of stability against circular slip failure shall be made as necessary. When the angle of shear resistance of the soil behind the wall and the ground is 30º or larger, the examination of stability against circular slip failure is often omitted. In the case of cellular-bulkhead quaywalls, it may be assumed that the wall is a rigid body and thus the circular slip surface does not go through the inside of the wall.

(6) Layout of Cells

The cells shall be arranged to make the area equal to the area of the wall with the equivalent width obtained in **(1)** and **(2)** above.

(a) Cells should be arranged evenly along the total length of the face line of the quaywall wherever possible. In general, it is advisable to set the cell center interval 10 to 15% longer than the cell diameter.

(b) Arcs should be arranged in such a way that they are connected perpendicularly to the wall of cell shell. The radius of the arc should be made smaller than that of the cell shell.

(c) In general, front tips of arcs tend to shift forward during and/or after the filling work. Therefore it is advisable to arrange arcs in such a way that their front surface are located about 100 to 150 cm inside the front face line of cell walls. It is also advisable to arrange cells in such a way that their front face line is located about 30 cm

inside the design face line of the quaywall.

(7) Analysis of Plate Thickness [89)]

① Analysis of the plate thickness of the cell units and the arcs is normally carried out using equation **(2.9.38)**. In the following equation, γ is the partial factor corresponding to its subscript, and the subscripts k and d indicate the characteristic value and design value respectively.

$$\sigma_{y_d} = T_d / t \tag{2.9.38}$$

where,

T : tension force acting on the cell (N/mm)
σ_y : yield stress of the cell material and the arc material (N/mm^2)
t : plate thickness of the cell and the arc (mm)

Also, the tensile force acting on the cell may be calculating using equation **(2.9.39)**.

$$T_d = \left\{ \left(w_{0_d} H_0' + q_d \right) K_{i_d} + \rho_0 g h_{w_d} \right\} R \tag{2.9.39}$$

where,

T : tensile force acting on the cell (kN/m)
K_i : earth pressure coefficient of filling
w_0 : converted weight per unit volume of filling (kN/m^3)
$\rho_0 g h_w$: buoyancy force due to the difference in water level within the cell and on the front surface (kN/m)
H_0' : converted wall height (m)
R : radius of cell (m)
q : surcharge (kN/m^2)

The design values in the equation can be calculated from the following equation. For the partial factors in the equation, refer to **Table 2.9.1**.

$$\sigma_{y_d} = \gamma_{\sigma_y} \sigma_{y_k}, \quad K_{i_d} = \gamma_{K_i} K_{i_k}, \quad q_d = \gamma_q q_k, \quad w_{0d} = \gamma_{w_0} w_{0k}$$
$$h_{wd} = \mathrm{RWL} - \mathrm{LWL} = \gamma_{h_w} \left\{ \mathrm{LWL} + \frac{2}{3} \left(\mathrm{HWL} - \mathrm{LWL} \right) \right\} - \mathrm{LWL} \tag{2.9.40}$$

where,

RWL : residual water level (m)
LWL : mean monthly lowest water level (m)
HWL : mean monthly highest water level (m)

② The equivalent wall height H_0' can be calculated using equation **(2.9.18)** in **(1)** above.

③ When materials such as gravel with large angle of shear resistance are used for the filling or when no compaction is performed, the characteristic value of the coefficient of filling earth pressure can be normally set as 0.6. When the filling is to be compacted, tanϕ can be used as the characteristic value of coefficient of filling earth pressure, because the internal pressure of the cell and the angle of shear resistance of the filling become larger. The characteristic value of the filling earth pressure coefficient for the arc sections can be taken at 1/2tanϕ.

④ In determining the plate thickness of the cells and the arcs of the steel cellular-bulkhead quaywalls with embedded sections, fabrication, construction, and maintenance aspects must be considered sufficiently. If a corrosion allowance is considered for the cells and arcs, the corrosion allowance shall be added to the plate thickness obtained from equation **(2.9.38)** to give the plate thickness. Equation **(2.9.41)** has been proposed as a method of obtaining the plate thickness of the cells necessary for the stresses during driving, from tests on buckling of cylindrical cells and from construction experience of the past.[91)]

$$t \geq 0.032 \left(RND'/E \right)^{0.5} \tag{2.9.41}$$

where,

t : plate thickness of the cell (mm)
E : young's modulus of the steel material (kN/mm^2)
R : radius of the cell (cm)
$\overline{N}$: average N value of the soils into which the cell is driven
D' : depth of drive of the cell (cm)

Also, the minimum plate thickness of the cell for which there is experience of driving in the past is 8mm, so it is desirable that the minimum plate thickness is about 8mm.

(8) Verification of T-shaped Sheet Piles of the Steel Cellular-bulkhead Quaywalls with Embedded Sections

① Normally, cells and arcs are connected by using T-shaped sheet piles. T-shaped sheet pile is a sheet pile with a special cross section to join the cell to arcs, see **Fig. 2.9.16**.

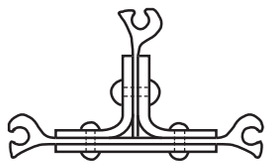

Fig. 2.9.16 T–Shaped Sheet Pile

② The structure of T-shaped sheet pile shall have sufficient safety against the tensile forces acting on the sheet pile of cells and arcs. The standard structures of T-shaped sheet pile are shown in **Figs. 2.9.17** and **2.9.18**.

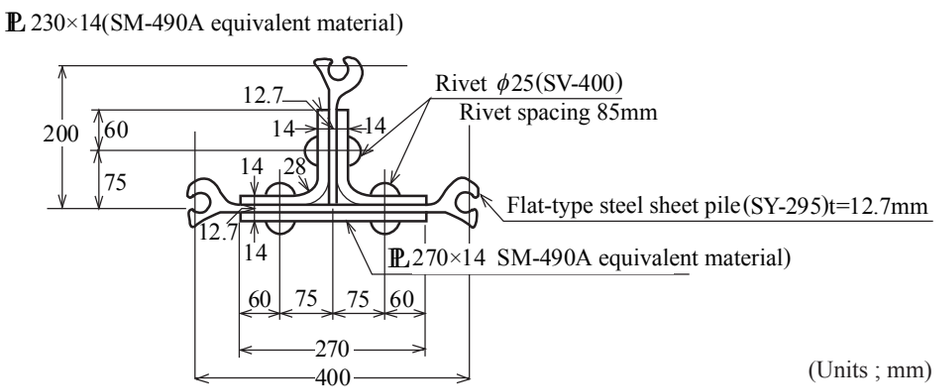

Fig. 2.9.17 Standard Cross Section of T-shaped Sheet Pile for Rivet Connection with Rivet Intervals

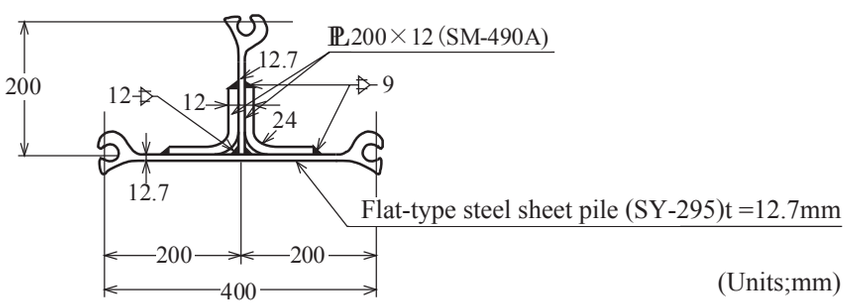

Fig. 2.9.18 Standard Cross Section of T-shaped Sheet Pile for Welding Connection

③ Strength of the cross sections shown in **Figs. 2.9.17** and **2.9.18** has been confirmed by a breaking test where the tensile strength of the joint of the sheet pile in a cell is 3,900 kN/m and the arc diameter is 2/3 or less of the cell, tensile strength = 2,600 kN/m. The rivet and welding joints for tests were made in a workshop.

(9) Partial Factors

For standard partial factors for use in analysis of shear deformation under permanent situations, sliding under permanent situations and variable situations associated with Level 1 earthquake ground motion, and the plate thickness under permanent situations where dominating action is earth pressure, refer to the values in **Table 2.9.1**.

The partial factors shown in **Table 2.9.1** were determined from probabilistic theory based on the average level of safety of design methods of the past, for the members whose probability distribution of the parameters was

known such as plate thickness of cells and plate thickness of arcs. In other words, the system failure probability based on equilibrium of forces was obtained from the index expressing the risk that the tensile stress in the cell and arc units will exceed the yield stress, assuming a standard limiting value of $P_f = 4.0\times10^{-15}$ for the cell units and $P_f = 3.1\times10^{-15}$ for the arc units. The other partial factors were determined taking the settings of the design methods of the past into consideration.

Table 2.9.1 Standard Partial Factors

(a) Permanent situations

			All facilities			
			γ	α	μ/X_k	V
Shear deformation	$\gamma_{\tan\phi}$	Tangent of angle of shear resistance	1.00	–	–	–
	γ_c	Cohesion	1.00	–	–	–
	γ_w , γ_{w_i}	Unit weight	1.00	–	–	–
	γ_{w0}	Unit weight of filling soil	1.00	–	–	–
	γ_{Pa}, γ_{Pp}, γ_{P1}, γ_{P2} , γ_{P3}	Resultant earth pressure	1.00	–	–	–
	γ_a	Structural analysis factor	1.20	–	–	–
Sliding	γ_W	Weight of wall structure	1.00	–	–	–
	γ_{Pv}	Resultant earth pressure	1.00	–	–	–
	$\gamma_{\tan\phi}$	Tangent of angle of shear resistance	1.00	–	–	–
	γ_{ks}	Horizontal shear Modulus	1.00	–	–	–
	γ_δ	Wall surface friction angle	1.00	–	–	–
	γ_q	Surcharge	1.00	–	–	–
	γ_a	Structural analysis factor	1.20	–	–	–
Cell shell plate thickness	Target reliability index β_T		7.77			
	Target reliability index used in calculating γ β_T'		7.6			
	γ_{σ_y}	Steel yield strength	0.65	0.805	1.26	0.073
	γ_{K_i}	Filling earth pressure coefficient	1.15	–0.593	0.60	0.20
	γ_{w0}	Converted unit weight of filling soil	1.00	–	–	–
	γ_q	Surcharge	1.00	–	–	–
	γ_{RWL}	Residual water level	1.05	–0.012	1.00	0.05
Arc plate thickness	Target reliability index β_T		7.8			
	Target reliability index used in calculating γ β_T'		7.8			
	γ_{σ_y}	Steel yield strength	0.65	0.817	1.26	0.073
	γ_{K_i}	Filling earth pressure coefficient	1.15	–0.576	0.60	0.20
	γ_{w0}	Converted unit weight of filling soil	1.00	–	–	–
	γ_q	Surcharge	1.00	–	–	–
	γ_{RWL}	Residual water level	1.05	–0.023	1.00	0.05

*1: α: Sensitivity factor, μ/X_k: Deviation of average values, average value / characteristic value, V: Coefficient of variation.

(b) Variable situations of Level 1 earthquake ground motion

			All facilities			
			γ	α	μ/X_k	V
Sliding	γ_W	Weight of wall structure	1.00	–	–	–
	γ_{Pv}	Resultant earth pressure	1.00	–	–	–
	$\gamma_{\tan\phi}$	Tangent of angle of shear resistance	1.00	–	–	–
	γ_{ks}	Horizontal shear modulus	1.00	–	–	–
	γ_δ	Wall surface friction angle	1.00	–	–	–
	γ_q	Surcharge	1.00	–	–	–
	γ_{kh}	Seismic coefficient for verification	1.00	–	–	–
	γ_a	Structural analysis factor	1.00	–	–	–

*1: α: Sensitivity factor, μ/X_k: Deviation of average values, average value / characteristic value, V: Coefficient of variation.

2.10 Placement-type Steel Cellular-bulkhead Quaywalls

Public Notice

Performance Criteria of Cellular-bulkhead Quaywalls with Embedded Sections

Article 52

2 In addition to the provisions in the preceding paragraph, the performance criteria of placement type cellular-bulkhead quaywalls with embedded sections shall be such that the risk of occurrence of overturning under the variable action situation, in which the dominant action is Level 1 earthquake ground motions, is equal to or less than the threshold level.

[Technical Note]

2.10.1 Fundamentals of Performance Verification

(1) The following is applicable to the performance verification of placement-type cellular-bulkhead quaywalls. The performance verification method described here may also be applied to the performance verification of seawalls using this structure.

(2) Placement-type cellular-bulkhead quaywalls are cellular-bulkhead quaywalls without an embedded section. In many cases these quaywalls are constructed on strong foundation subsoil whose bearing capacity is considered sufficiently large or on the subsoil that has been improved to have sufficient bearing capacity.

(3) An example of the sequence of performance verification of placement-type cellular-bulkhead quaywalls is shown in **Fig. 2.10.1**.

(4) In the performance verification of placement-type cellular-bulkhead quaywalls, normally analysis of shear deformation of cells is carried out for permanent situations, and analysis of overturning of cells is carried out for variable situations associated with Level 1 earthquake ground motion.

(5) For the filling of cells, it is desirable that good quality sand or gravel is used, compacted to a sufficient density.

2.10.2 Actions

For the action on placement-type cellular-bulkhead quaywalls, refer to **2.9 Cellular-bulkhead Quaywalls with Embedded Sections**. The characteristic value of seismic coefficient for verification used in the performance verification of placement-type cellular-bulkhead quaywalls under variable situations associated with Level 1 earthquake ground motion shall be appropriately calculated taking into consideration the structural characteristics. For the purpose of convenience, the characteristic value of seismic coefficient for verification of placement-type cellular-bulkhead quaywalls may be calculated in accordance with **2.2 Gravity-type Quaywall, 2.2.2(1) Seismic Coefficient for Verification used in Verification of Damage due to Sliding and Overturning of Wall Body and Insufficient Bearing Capacity of Foundation Ground in Variable Situations in respect of Level 1 earthquake ground motion**.

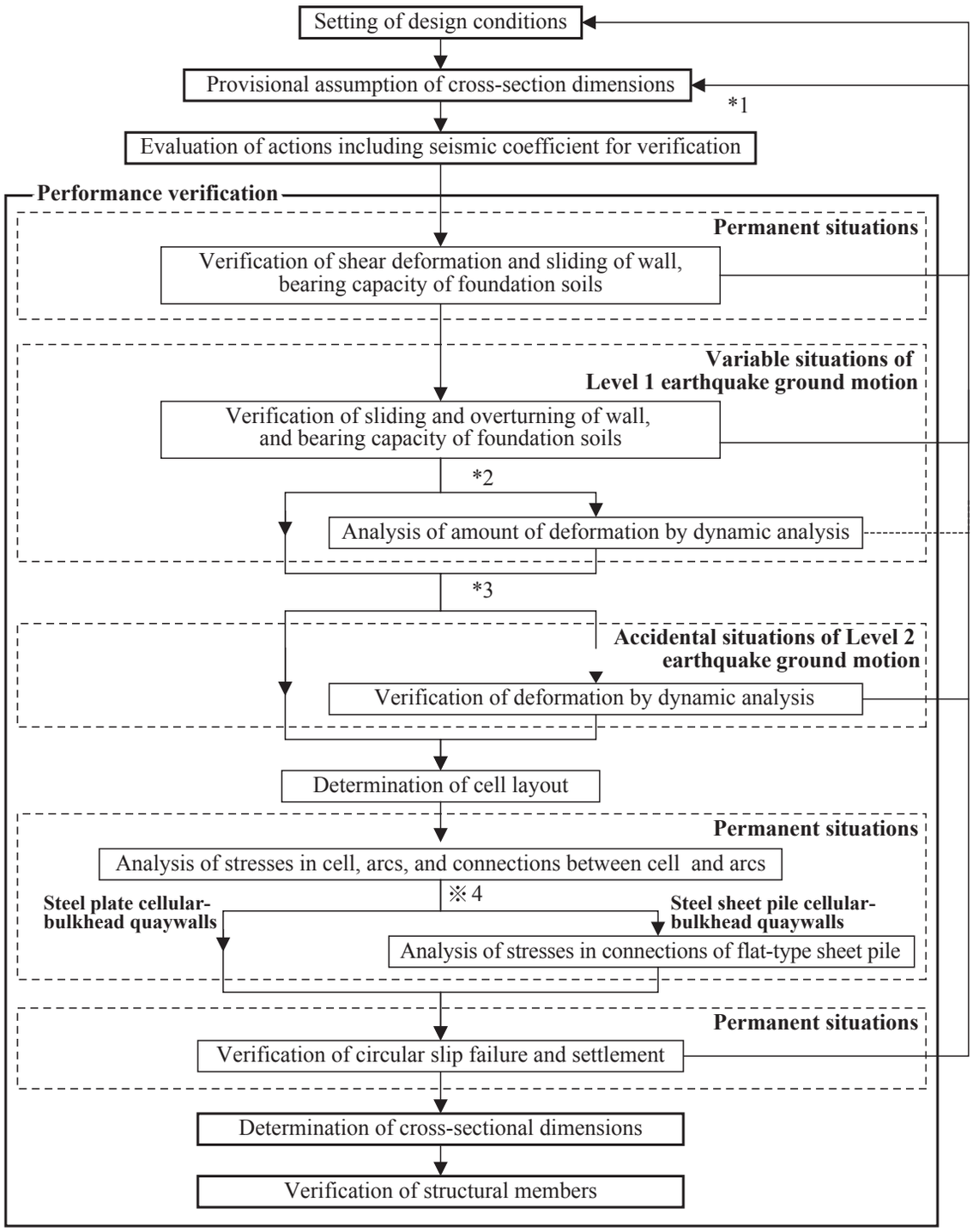

*1: The evaluation of the effect of liquefaction is not shown, so this must be separately considered.
*2: Analysis of the amount of deformation due to Level 1 earthquake ground motion may be carried out by dynamic analysis when necessary. For high earthquake-resistance facilities, analysis of the amount of deformation by dynamic analysis is desirable.
*3: For high earthquake-resistance facilities, verification is carried out for Level 2 earthquake ground motion.
*4: For steel sheet pile cellular-bulkhead quaywalls, verification is carried out for the connections of flat-type sheet pile.

Fig. 2.10.1 Example of the Sequence of Performance Verification of Placement-type Cellular-bulkhead Quaywalls

2.10.3 Setting of Cross-sectional Dimensions

The width of the wall structure used in performance verification may be the equivalent wall width, which is an imaginary wall width obtained by replacing the cell and arc parts with a rectangular wall structure. For the converted wall structure width, refer to **2.9 Cellular-bulkhead Quaywalls with Embedded Sections**.

2.10.4 Performance Verification

(1) Examination of Shear Deformation of Wall

① Examination of the shear deformation of the wall body shall be made in accordance with the performance verification methods described in **2.9 Cellular-bulkhead Quaywalls with Embedded Sections**. The resistance moment shall be calculated appropriately in consideration of the structural characteristics of the cellular-bulkhead and the deformation of the wall. The deformation moment to be used in the verification shall be the moment at the sea bottom due to external forces acting on the wall body above the sea bottom, including active earth pressure and residual water pressure.

② When the deformation of the wall body is not allowed, i.e. when the horizontal displacement of the cell top is approximately less than 0.5% of the cell height, the resistance moment against deformation can be calculated using equations **(2.10.1)** and **(2.10.2)**.

$$M_{rd_d} = \frac{1}{6} w_{0_d} H'^{\,3}_{d_d} R_d \tag{2.10.1}$$

$$Rd = \nu_d^{\,2}(3 - \nu_d \cos\phi_d)\sin\phi_d \tag{2.10.2}$$

where

M_{rd} : resistance moment of cell (kN•m/m)
H_d' : equivalent wall height used in the examination of deformation of cell (m)
R : deformation resistance coefficient
w_0 : equivalent unit weight of filling (kN/m³)
v : ratio of equivalent wall width to equivalent wall height used in examining cell deformation $v=B/H_d'$
ϕ : angle of shear resistance of filling material (º)

The design values in the equations can be calculated using the following equations. Here, the symbol γ represents the partial factor for its subscript, and subscripts d and k respectively stand for the design value and the characteristic value.

$$\begin{aligned} w_{0_d} &= \gamma_{w_0} w_{0_k} \\ \tan\phi_d &= \gamma_{\tan\phi} \tan\phi_k \end{aligned} \tag{2.10.3}$$

All partial factors used in calculating the cell's resistance moment can be set at 1.00.

③ In the calculation of resistance moment, the equivalent wall height of the cell H_d' is calculated by means of equation **(2.10.4)**. The height H_d' is that above the sea bottom.

$$H'_{d_d} = \left(w'_d / w_{0_d}\right) H_{w_d} + \left(w_{td} / w_{0_d}\right)\left(H_d - H_{w_d}\right) \tag{2.10.4}$$

where

H_d : height from sea bottom to top of quaywall (m)
H_w : height from sea bottom to residual water level (m)
w_t : wet unit weight of filling above residual water level (kN/m³)
w' : submerged unit weight of saturated filling (kN/m³)
w_0 : equivalent unit weight of filling (kN/m³); normally, w_0= 10kN/m³

In the calculation of the equivalent wall height H_d', surcharge may be ignored as in the case of resistance moment calculation discussed in the performance verification of **2.9 Cellular-bulkhead Quaywalls with Embedded Sections**. The design values in the equations can be calculated using the following equations. Here, the symbol γrepresents the partial factor for its subscript, and subscripts k and d respectively stand for the characteristic value and the design value. Refer to **Table 2.10.1** for partial factors to be used for the verification.

$$\begin{aligned} w_{0_d} &= \gamma_{w_0} w_{0_k} \\ w'_d &= \gamma_{w'} w'_k \\ w_{t_d} &= \gamma_{w_t} w_{t_k} \\ H_{w_d} &= \gamma_{H_w} H_{w_k} \end{aligned} \tag{2.10.5}$$

④ When the filling material can be regarded as uniform, the height H_d of the quaywall top above the sea bottom can be used in place of the equivalent wall height H_d' of equation **(2.10.1)**.

(2) Examination of Sliding of Wall Structure
For examination of sliding, refer to **2.9 Cellular-bulkhead Quaywalls with Embedded Sections**.

(3) Examination of Overturning of Wall

① In the calculations to examine the stability of a cell against overturning, the stability of cell shall be examined against the external forces acting above the wall bottom, including earth pressure, residual water pressure, and ground motion.

② For performance verification for overturning, normally equation **(2.10.6)** can be used. In the equation, the subscripts *k* and *d* indicate the characteristic and design values respectively. For verification of overturning of cell structures, the structural analysis factor shall be an appropriate value 1.10 or higher, and all other partial factors can be 1.00.

$$M_{rd_d} \geq \gamma_a M_{d_d} \tag{2.10.6}$$

where,
M_{rd} : resistance moment against overturning of steel cell (kN·m/m)
M_d : deformation moment of cell bottom surface (kN·m/m)

③ The resistance moment of cell against overturning can be calculated using equations **(2.10.7)** and **(2.10.8)**.

$$M_{rd_d} = \frac{1}{6} w_{0_d} H_d'^3 R_{t_d} \tag{2.10.7}$$

$$\begin{aligned} R_{t_d} &= \nu_d'^2 (3 - \nu_d' \cos\phi_d) \sin\phi_d + 3(\alpha^2 + \beta^2) + 6\nu_d \beta \\ \alpha &= K_a \tan\delta_d \\ \beta &= K_a \tan\delta_d (\nu_d'/2)(4 - \nu_d' \cos\phi_d) \tan\phi_d \tan\delta_d \\ \nu_d' &= \nu - (\alpha + \beta) \end{aligned} \tag{2.10.8}$$

where
M_{rd} : resistance moment of steel plate cell against overturning (kN·m/m)
H' : equivalent wall height of the cell to obtain the resistance moment against overturning (m)
R_t : overturning resistance coefficient
ν : rate of equivalent wall width to equivalent wall height of the cell, $\nu = B/H'$
B : equivalent wall width of the cell (m)
δ : wall friction angle of filling material (°); normally, δ = 15°is used.
K_a : coefficient of active earth pressure of filling material

For other symbols, refer to those used in equations **(2.10.1)** and **(2.10.2)**.
The design values in the equation can be calculated using equations below:

$$w_{0d} = \gamma_{w_0} w_{0k}, \quad \tan\phi_d = \gamma_{\tan\phi} \tan\phi_k, \quad \delta_d = \gamma_\delta \delta_k \tag{2.10.9}$$

④ The equivalent wall height H' used to calculate the resistance moment against overturning can be calculated using equation **(2.10.10)**.

$$H' = (w'/w_0) H_w + (w_t/w_0)(H - H_w) \tag{2.10.10}$$

where
H' : equivalent wall height used to calculate the resistance moment against overturning (m)
H_d : distance from the bottom of the cell to the top of the quaywall (m)
H_w : distance from the bottom of the cell to the residual water level (m)

⑤ In general, the filling of a cell used as a quaywall is not uniform because the major portion of such filling is under the water and thus subjected to buoyancy. Therefore, the equivalent wall height is used here as in the calculation of the resistance moment of the cell against deformation. When the filling material can be considered as uniform, the total wall height of the cell *H* may be used in the same calculation in place of the equivalent wall height *H′* of equation **(2.10.7)**.

Although the actions of the filling against overturning is not uniform,[91] since the main part of the filling's resistance is the hanging effect, the margin of error is minimal and safety is secured even when the ratio of equivalent wall width to equivalent wall height *v* is used as in equation **(2.10.8)**. In this case, surcharge can be ignored.

⑥ The overturning moment is the moment at the bottom of cell due to the external forces acting above the bottom. The equivalent wall height of the cell *H*' used in the calculation of the resistance moment should be a height above the cell bottom.

(4) Examination of Bearing Capacity on Cell Front Toe

① The maximum subsoil reaction force generated at the front toe of the cell shall be calculated appropriately in consideration of the effect of the filling material acting on the front wall of the cell.

② The maximum front toe reaction force on the cell front toe may be obtained from equation **(2.10.11)**.

$$V_{td} = \frac{1}{2} w_d H^2 \tan^2 \phi_d \tag{2.10.11}$$

where,

V_t : maximum front toe reaction force on the cell front toe (kN/m)
w_d : unit weight of filling soil (kN/m^3)
H : total wall height of the cell (m)
ϕ : angle of shearing resistance of filling soil (°)

The design values in the equation may be calculated using the following equation. For calculation of the maximum front toe reaction force on the cell front toe, all partial factors may be taken to be 1.00.

$$w_d = \gamma_w w_k, \quad \tan\phi_d = \gamma_{\tan\varphi} \tan\phi_k \tag{2.10.12}$$

Equation **(2.10.11)** is an equation giving the weight of the filling soil weighing down on the front wall, with the product of the earth pressure coefficient of the filling soil and the wall surface friction coefficient given by $\tan^2\phi$. Therefore, when the filling is not uniform, it is necessary to carry out the calculation for the same domain as the earth pressure calculation.

③ The wall height H should normally be considered as the height of the wall top above the wall bottom. However, when the superstructure of the cell is supported by foundation piles, it may be considered as the height of the bottom of the superstructure above the wall bottom.

④ Equation **(2.10.11)** represents the cell front toe reaction force when the overturning moment is roughly equal to the overturning resistance moment of equation **(2.10.7)**. Without occurrence of overturning, the reaction force is smaller than the value obtained from equation **(2.10.11)**. According to a model test, the maximum front toe reaction force V_t is nearly proportional to the overturning moment.[92] Therefore reaction force without occurrence of overturning should be calculated using equation **(2.10.12)**.

$$V_d = V_{td} \left(M_d / M_{r0d} \right) \left(Md / M_{r0d} \right) \tag{2.10.13}$$

where

V : front toe reaction force of the cell corresponding to overturning moment M (kN/m)
M : overturning moment (kN·m/m)
M_{r0} : resistance moment against overturning (kN·m/m)

Hence, use of larger cell radius makes the cell safer against overturning by increasing the resistance moment M_{r0}, while reducing the front toe reaction force V.

⑤ For the bearing capacity of the ground, refer to the bearing capacity in **Chapter 2, 2.2 Bearing Shallow Spread Foundations**.

(5) Examination of Plate Thickness

① Examination of the plate thickness of the cells and arcs may be carried out in accordance with the examination of plate thickness given in the performance verification in **2.9 Performance Verification of Cellular-bulkhead Quaywalls with Embedded Sections**.

② From the point of view of cell stiffness and corrosion, a minimum cell shell thickness of 6mm is necessary.

(6) Partial Factors

For standard partial factors for use in verification of the permanent situations and variable situations in respect of Level 1 earthquake ground motion, refer to the values in **Table 2.10.1**. The partial factors in **Table 2.10.1** have been determined considering the setting of design methods of the past.

Table 2.10.1 Standard Partial Factors

(a) Permanent situations

			High earthquake-resistance facilities, normal			
			γ	α	μ/X_k	V
Shear deformation	$\gamma_{\tan\phi}$	Tangent of the angle of shearing resistance	1.00	–	–	–
	γ_w, γ_{w_i}	Unit weight	1.00	–	–	–
	γ_{w_0}	Unit weight of filling soil	1.00	–	–	–
	γ_δ	Wall surface friction angle of filling soil	1.00	–	–	–
	γ_a	Structural analysis factor	1.20	–	–	–

*1: α: Sensitivity factor, μ/X_k: Deviation of average values, average value / characteristic value, V: Variable factor.

(b) Variable situations of Level 1 earthquake ground motion

			High earthquake-resistance facilities, normal			
			γ	α	μ/X_k	V
Overturning	γ_w	Unit weight of filling soil	1.00	–	–	–
	$\gamma_{\tan\phi}$	Tangent of the angle of shearing resistance	1.00	–	–	–
	γ_{P_h}	Resultant earth pressure	1.00	–	–	–
	$\gamma_{P_{dw}}$	Resultant dynamic water pressure	1.00	–	–	–
	γ_{k_h}	Seismic coefficient for verification	1.00	–	–	–
	γ_a	Structural analysis factor	1.10	–	–	–

*1: α: Sensitivity factor, μ/X_k: Deviation of average values, average value / characteristic value, V: Variable factor.

2.10.5 Performance Verification of Structural Members

For the performance verification of the structural members of placement-type cellular-bulkhead quaywalls, refer to the performance verification of the structural members in **2.9 Cellular-bulkhead Quaywalls with Embedded Sections**.

2.11 Upright Wave-absorbing Type Quaywalls

2.11.1 Fundamentals of Performance Verification

(1) The following is applicable to upright wave-absorbing type quaywalls, but it may also be applied to the performance verification of seawalls.

(2) The upright wave-absorbing type quaywall shall be structured so as to have the required capability of wave energy dissipation and shall be located at strategic positions for enhancing the calmness within the harbor.

(3) Waves within a harbor are the result of superposition of the waves entering the harbor through the breakwater openings, the transmitted waves over the breakwaters, the wind generated waves within the harbor, and the reflected waves inside the harbor. By using quaywalls of wave-absorbing type, the reflection coefficient can be reduced to 0.3 to 0.6 from that of 0.7 to 1.0 of solid quaywalls. To improve the harbor calmness, it is important to design the alignments of breakwaters in a careful manner. The suppression of reflected waves through the provision of wave energy absorbing structures within the harbor is also an effective means of improving the calmness.

(4) Determination of Structural Type

① Quaywalls of wave-absorbing block type are constructed by stacking layers of various shape of concrete blocks. This type is normally used to build relatively small quaywalls. The quaywall width is determined by stability calculation as a gravity-type quaywall.

② Upright wave-absorbing caisson type quaywalls include slit–wall caisson type and perforated–wall caisson type. This type is normally used to build large size quaywalls. The wave-absorbing performance can be enhanced by optimizing the aperture rate of the front slit wall, the water chamber width, and others for the given wave conditions.

③ The reflection coefficient is preferably determined by means of a hydraulic model test whenever possible, but it may also be determined in accordance with **Chapter 4, 3.5 Gravity-type Breakwater (Upright Wave-absorbing Block Type Breakwaters)** and **Chapter 4, 3.6 Gravity-type Breakwater (Wave-absorbing Caisson Type Breakwaters)**.

④ It is recommended that the crown elevation of the wave-absorbing section of a wave-absorbing block type quaywall is set as high as 0.5 times the significant wave height or more above mean monthly-highest water level, and that the bottom elevation of the wave-absorbing section is set as deep as 2 times the significant wave height or more below mean monthly lowest water level.

2.11.2 Performance Verification

(1) An example of the sequence of the performance verification of upright wave-absorbing type quaywalls is shown in **Fig. 2.11.1**.

(2) The characteristic value of the seismic coefficient for verification used in performance verification of upright wave-absorbing type quaywalls for the variable situations associated with Level 1 earthquake ground motion shall be appropriately calculated taking the structural characteristics into consideration. For convenience, the characteristic value of the seismic coefficient of upright wave-absorbing type quaywalls may be calculated in accordance with that for gravity– type quaywalls shown in **2.2.2(1) Seismic Coefficient for Verification used in Verification of Damage due to Sliding and Overturning of Wall Body and Insufficient Bearing Capacity of the Foundation Ground in Variable Situations in respect of Level 1 earthquake ground motion**.

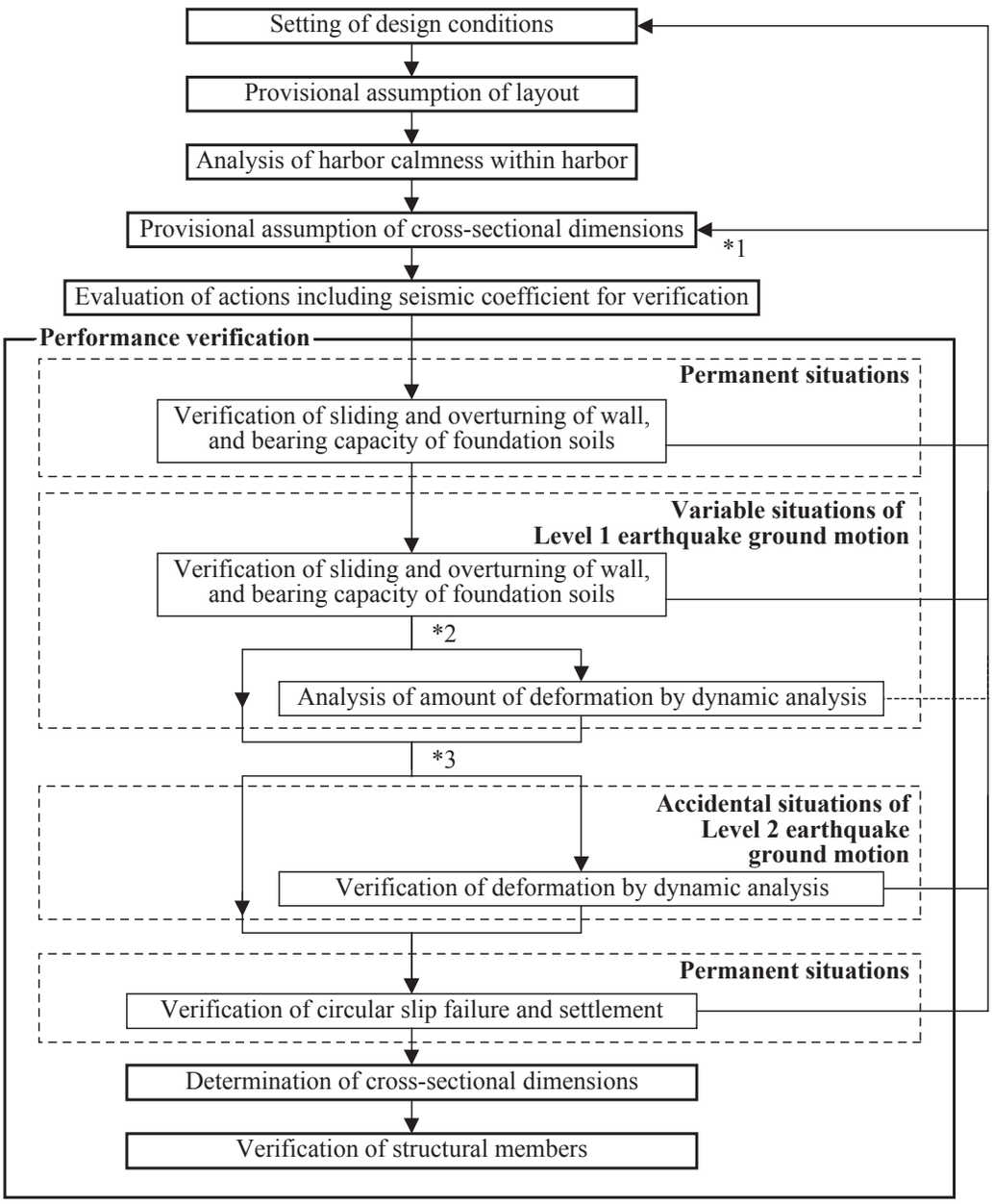

*1: Evaluation of liquefaction, settlement, etc., are not shown, so it is necessary to consider these separately.
*2: When necessary, an examination of the amount of deformation using dynamic analysis can be carried out for Level 1 earthquake ground motion.
For high earthquake-resistance facilities, it is desirable that an examination of the amount of deformation be carried out using dynamic analysis.
*3: Verification for Level 2 earthquake ground motion is carried out for high earthquake-resistance facilities.

Fig. 2.11.1 Example of the Sequence of Performance Verification of Upright Wave-absorbing Type Quaywalls

References

1) Miyazaki, S.: Practice of Hydrography implemented in the course of port construction, Notice of Construction Division of Port and Harbors Bureau, Ministry of Transport, No. 61, 1972
2) Japan Port Associating: Handbook of design of port construction works, pp. 215, 1959
3) Matsunaga, Y., K. Oikawa and T. Wako: Structural limit of wharves, Journal of JSCE, Vol. .36 No.8, pp. 26-27, 1951
4) C. Zimmerman, H. Schwarze, N. Schulz, and S. Henkel: International Conference on Coastal and Port Engineering in Developing Countries, 25/29 September, Rj, Brazil, pp.2437-2451, 1995
5) Matsunaga, Y., K. Oikawa and T. Wako: Deformation of foundation ground of gravity type port facilities due to Hanshin-Awaji Large Disaster, Proceedings of Academic Papers on Hanshin-Awaji Large Disaster, pp.383-390,1996
6) Nakahara, T., Kohama, E. and Sugano, T.: Model shake table test on the seismic performance of gravity type quaywall with

different foundation ground properties, 13WCEE, 2004
7) Kishitani, K., Y. Kunishige, T. Hirano and M. Yamashita: Design method of caisson type wharf with sloping bottom and its characteristics, Proceedings of 53th Annual Conference of JSCE, 1998
8) Morishita, T., G. Kimura, K. Shiramizu and H. Tanaka: Discussion on behavior of caisson type wharves with sloping bottom under earthquake, Proceedings of 53th Annual Conference of JSCE, 1998
9) Nagao, T., N. Iwata, K. Fujimura, M. Morishita, H. Sato and R. Ozaki: Seismic coeffiects of gravity type and sheet pile type quay wall against the level-one earthquake ground motion, Technical Note of National Institute for Land and Infrastructure Management No.310, 2006
10) Nagao, T. and N. Iwata: Methodology of the determination of Seismic coeffiects for the performance verification of gravity type and sheet pile type quay wall against the level-one earthquake motion, Proceedings of Structural Engineering, JSCE, 2007
11) FURUDOI, T. and Takeo KATAYAMA: Field observation of residual water level, Technical Note of PHRI No.115, 1971
12) Coastal Development Institute of Technology: Technical Manual for L-sape wharves, 2006
13) Kohama, E., Miura, K., Yoshida, N., Ohtsuka, N. and Kurita, S.: Instability of Gravity Type Quaywall lnduced by Liquefaction of Backfill during Earthquake, Soils and Foundations, Vol.38, No.4,PP.71-84, 1998
14) Tsuchida, T., Y. Kikuchi, T. Fukuhara, T. Wako and K. YAMAMURA: Slice Method for Earth Pressure Analysis and its Application to Light-Weight Fill, Technical Note of PHRI No. 924, 1999
15) Kitajima, S., H. SAKAMOTO, S. KISHI, T. NAKANO and S. KAKIZAKI: On Some Problems Being Concerned with Preparation for the Design Standards on `Port and Harbour Structures, Technical Note of PHRI No.30, pp.32-43,1967
16) Nagao, t., R. Shibazaki and R. Ozaki: Ordinary Level-one reliability design method of port facilities based on minimum expected total cost considering economic losses, Proceedings of Structural Engineering, JSCE, Vol. 51A, pp. 389-400, 2005
17) Lysmar, J,, Udaka, T.,Tsai, C.F. and Seed, H.B.: FLUSH- A Computer program for earthquake response analysis of horizontally layered site, Report No. EERC 72-12, College of Engineering, University of California, Berkeley, 1972
18) IAI, S., Yasuo MATSUNAGA and Tomohiro KAMEOKA: Strain Space Prasticity Model for Cyclic Mobility, Rept. of PHRI Vol. 29 No. 4, pp. 27-56, 1990
19) Susumu IAl, Koji ICHII, Hangbng LIU and Toshikazu MORITA: Effective stress analyses of port structures, Special Issue of Soils and Foundations, Japanese Geotechnical Society, pp.97-114, 1998
20) ITASCA: FLAC- Fast Lagrangian Analysis of Contina, User's Manua1, Itasca Consulting Group, Inc., Minneapolis, Minnesota, 1995
21) Cundall, P.A.: A computer model for simulating progressive, large scale movement in blocky rock system, Symp. ISRM, Nancy, France, Proc., Vol.2, pp.129-136, 1971
22) Kanatani, M., Kawai, T. and Tochigi, H.: Prediction method on deformation behavior of caisson-type seawalls covered with armored embankment on man-made islands during earthquakes, Soil sand Foundations, Japanese Geotechnical Society, Vol.41-6, 2001
23) Takahashi, T., H. Sai and K. UkaiProposal of safety examination method against liquefaction of dikes by Finite Element Method, Proceedings of 40th Conference on Geotechnical Engineering, 205
24) Iai, S.: Similitude for shaking table tests on soil-structure-fluid modeling gravitational field,, Rept. of PHRI Vol. 27 No. 3, pp .3-24, 1988
25) Sugano, T. : U-Japan Symposium on earth quake resistance of port and City function- Prototype experiment at Tojkachi Port-Disaster Prevention, No.190, pp3-5, 2003
26) Kotsutsumi, O., S. Shiozaki, K. Kazui, S. Iai and H. Mori : Examination of the improvement in the presiceness of the analysis of 2-Dimensional effective stress preciseness improvement
27) IAI, S., Koji ICHII and Toshikazu MORITA: Mechanism of Damage to Port Facilities during 1995 Hyogo-Ken Nanbu Earthquake (Part 7)Effective Stress Analysis on a Caisson Type Quay Wall, Technical Note of PHRI No.813,1995
28) lshihara, K., Yasuda, S. and Nagase, H.: Soil characteristics and ground damage, Special Issue of Soils and Foundations, Japanese Geotechnlcal Society, pp.109-118, 1996
29) Toshikazu MORITA, T., Susumu IAI, Hanlong LIU, Koji ICHI and Yukihiro SATO: Simplified Method to Determine Parameter of FLIP, Technical Note of PHRI No.869, 1997
30) Handbook of Countermeasure against Liquefaction of Reclaimed Land (Revised Edition), CDIT, 1997.
31) FLIP Study Group: Summary of the results of sensitivity analysis of various FLIP parameters for damaged cross section of RF3 wharf at Rokko Island, 1999
32) FLIP Study Group: Lecture note of FLIP utilization method, 2004
33) Kazui, Y.: Utilization of FEM in designing and orientation, Soil and Foundation, VoL53 No.8 Ser. No.571, pp.10-12,2005
34) Kazui, K., H. Takahashi, T. Nakamoto and Y. Akakura: Evaluation of allowable damage deformation of gravity type wharf during earthquake, Proceedings of 10th Symposium of Japanese earthquake Engineering, K-4,1998
35) Koji Ichii, Susumu Iai, Yukihiro Sato and Hanlong Liu: Seismic performance evaluation charts for gravity type quaywalls, Structural Eng./Earthquake Eng., JSCE, Vol.19,No.1, 21s-31s, 2002
36) KASUGAI, Y., Kenichiro MINAMI and Hiroyuki TANAKA: The Prediction of the Lateral Flow of Port and Harbour Structures, Technical Note of PHRI No.726, 1992
37) Ishii, Y. (Translation): Tschbotarioff's Soil Mechanics (Vol. I), Giho-do Publishing, p.308,1964

38) P.W. Rowe: Anchored sheet pile walls, Proc. Of L.C.E., Vol.1 Pt.1, 1955
39) Arai, H., S. Yokoi and T. Furube: Study on earthquake-resistance performance of sheet pile walls Second Report, Proceedings of 2nd annual conference of PHRI, p.73, 1964
40) Arai, H. and S. Yokoi: Study on earthquake-resistance performance of sheet pile walls Third Report, Proceedings of 3rd annual conference of PHRI, p.100, 1965
41) Sawada, G.: Calculation method of passive earth pressure of embedded portion of sheet piles in the sloped ground, Technical Note of PHRI, No. 9, 1964
42) Nagao, T., N. Iwata, K. Fujimura, M. Morishita, H. Satou and R. Ozaki: Seismic coeffiects of caisson type and sheet pile type quay wall against the level-one earthquake ground motion, Technical Note of National Institute for Land and Infrastructure Management No.310, 2006
43) Nagao, T. and R. Ozaki: Study on performance specification of sheet pile wharf with vertical pile anchorage against Level-one earthquake motion, Proceedings of Earthquake Engineering, JSCE, 2005
44) Ishii, Y. (Translation): Tschbotarioff's Soil Mechanics (Vol. II), Giho-do Publishing, p.192, 1964
45) Suzuki, M: Port Engineering, Kazama Shoten Publishing, p.474,1955
46) R.W. Rowel: A theoretical and experimental analysis of sheet-pile walls, Proc.of L.C.E., Vol.4. Pt.1, 1955
47) Ishiguro, K., M. Shiraishi and H. Umiwa: Steel pile method Vol. 1, Sanka-do Publishing, p,95,1982
48) Takahashi, K., Y. Kikuchi and K. Ishiguro:Analysis of dynamic behavior of Tie-rod type sheet pile wall, Proceedings of Structural Engineering, JSCE, Vol.42A, P.ll95, 1996
49) Takahashi, K., Y. Kikuchi and Y. Asaki Analysis of Flexural Behavior of Anchored Sheet Pile Walls, Technical Note of PHRI No,756,1993
50) Takahashi, K. and K. Ishiguro: Resolution of piles and sheet piles as vertical beam under transverse loads, Sankaido Publishing, pp.177-183, 1992
51) Terzaghi: Evaluation of coefficients of subgrade Reaction, Geotechnique, Vol.5, pp.297-326, 1955
52) Tschbotarioff: Large scale earth pressure tests with model flexible bulkheads, Princeton Univ., 1949
53) Terzaghi and Peck (Translated by Hoshi): Soil Mechanics (Application), Maruzen Publishing, p.192,1970
54) KUBO, K., Fujio SAIGUSA and Atsumi SUZUKI: Lateral Resistance of Vertical Anchor Piles, Rept. of PHRI Vol.4 No.2, 1965
55) National Association of Disaster Prevention: Design manual for disaster restoration works, 2005
56) Japan Road Association: Guideline for construction of temporary structures for earth works for roads, pp.107-109,1999
57) AKATSUKA, Y. and Kuniichi ASAOKA: Experimental Studies on High Strength Tie Rod, Rept. of PHRI Vol. 7 No. 3,pp.135-167, 1968
58) Nagao, t., R. Shibazaki and R. Ozaki: Ordinary Level-one reliability design method of port facilities based on minimum expected total cost considering economic losses, Proceedings of Structural Engineering, JSCE, Vol. 51A, pp. 389-400, 2005
59) Ozaki, R. and T. Nagao: Analysis of behavior of sheet pile wharves during earthquake utilizing the location of coupled-pile anchorage as a parameter, Proceedings of 60th Annual Conference of JSCE, 2005
60) Katayama, T., T. Nakano, T. Hasumi and K. Yamaguchi: Analysis of the Damage to Harbour Structures by the 1968 TOKACHI-OKI Earthquake, Technical Note of PHRI No,93,pp.89-98,p.136,1969
61) Port and Harbour Bureau, First Port Construction Bureau and PHRI Ministry of Transport: Report of Damages of Ports due to Niigata Earthquake Part 1, .101,1964
62) MITSUHASHI, I.: Inferring the value of the 2-dimensional k-value, Technical Note of PHRI No.219, 1975
63) Kotsutsumi, O., S. Shiosaki, K. Kazui, S. Iai and H. Mori : Examination of prescision improvement of 2-dimensional effective stress analysis, Proceedings of Offshore Development, JSCE, Vol. 20,pp.443-448, 2004
64) Iai, S., M. Tatsuta, O. Kotsutsumi, Y. Tame, Y. Yamamoto and H. Mori: Analytical examination of effect of initial stress conditions of ground on the behavior of sheet pile wharf during earthquake, Proceedings of 26th Conference on Earthquake Engineering, pp.809-812,2001
65) Okada, T., S. Miwa, K. Ishikura, S. Hiraoka, E. Matsuda and N. Yoshida: Verification of modeling method of initial stress state for effective stress analysis based on the examples of the damages of steel sheet pile wharves, Proceedings of 26th Conference on Earthquake Engineering, pp.813-816, 2001
66) Miwa, S., O. Kotsutsumi, T. Ikeda, T. Okada and S. Iai: Evaluation of earthquake damage of steel sheet pile wharves based on stress analysis considering initial stress states, Proceeding of Structural Engineering, Vol. 49A, pp. 369-380, 2003
67) Shiozaki, S., T. Sugano and E. Kohama : Experiment and analysis on earthquake resistance of sheet pile wharves, Proceedings of Offshore Development, JSCE, pp.131-136, 2004
68) Japan Port Association: Guideline for construction of steel sheet piles, 1963
69) Ishiguro, K., N. Shiraishi and H. Umiwa: Steel Sheet pile method (Vol. 1). Sanakai-do Publishing, pp,297-328,1982
70) Ooshima, M. M. Sugiyama: Design method of sheet pile walls with batter pile anchorage, Soil and Foundation, Vol. 13, No. 3, pp. 11-18, 1965
71) Ishiwata, T., K. Ishiguro and Y. Higuchi: Sheet pile walls with batter pile anchorage and measurement of their behavior, Technical Report of Fuji Steel Corporation, Vol. 13 No. 4, pp. 73-87, 1964
72) Sawaguchi, M.: Lateral Behavior of a Double Sheet Pile Wall Structure, Soils and Foundations, Vol.14 No.1, pp.45-59,1974
73) OHORI, K., Yoshihiro SHOJI, Kunio TAKAHASHI, Hiroshi UEDA, Michihiko HARA, Yutaka KAWAI and Keisuke SHIOTA: Static Behavior of Double Sheet Pile Wall Structure, Rept. of PHRI Vol.23 No.1,pp.1O3-151, 1984

74) Technical Committee of Shore Protection Facilities: Technical Standards and commentary of coastal protection facilities, Japan Port Association, 2004
75) Japan Road Association: Guideline for construction of temporary structures for earth works for roads, pp.76-87, 1999
76) G.R. Tschebotarioft, F.R, Ward: Measurements with Wicgmann lnc1inometer on Five Sheet Pile Bulkheads, 4th Intern, Conf. Soil Mech. And Foundation Eng., Vol.2, 1957
77) Edited by G.A. Leonards: Foundation Engineering, McGrawHill Book Co., PP.514, 1962
78) TAKAHASHI, K., Setsuo NODA, Katsumi KANDA, Satoshi MIURA, Taisaku MIZUTANI and Shigeki TERAZAKI: Horizontal Loading Tests on Models of Steel Sheet Pile Cellular Bulkheads-Part 2 Dynamic Behavior-
79) TAKAHASHI, K., Setsuo NODA, Katsumi KANDA, Satoshi MIURA, Taisaku MIZUTANI and Shigeki TERAZAKI: Horizontal loading Tests on Models of Steel Sheet pile cellular Bulkhead-Part 2 Dynamic Behavior-, Technical Note of PHRI, No.639, 1989
80) KITAJIMA, S., Setsuo NODA and Tanekiyo NAKAYAMA: An Experimental Study on the Static Stability of the Steel Plate Cellular Bulkheads with embedment, Technical Note of PHRI, No,375,1981
81) NODA, SD., Sosuke KITAZAWA, Takeshi IIDA, Nobuo MORI and Hiroshi TABUCHI: An Experimental Study on the Earthquake Resistance of Steel Plate Cellular Bulkheads with Embedment, Rept. of PHRI Vol.21 No.2, 1982
82) Yokoyama, Y.: Design and construction of steel piles, Sankai-do Publishing, pp. 95-96, 1963
83) Yoshida, I. and R. Yoshinaka: Engineering characteristics of Akashi and Kobe Layers, Report of Japan Institute of Construction Engineering, Vol. 129, 1966
84) Yoshida, I. and Y. Adachi: Experimental Study on horizontal bearing capacity of caisson foundation, Report of Japan Institute of Construction Engineering, Vol. 139, pp,24-25, 1970
85) Nagao, T. and T. Kitamura: Study on the methodology to determine optimum cross section of Cellular type wharves, Proceedings of Offshore Development, JSCE, Vol. 20, pp. 203-208, 2004
86) Sumiya, K. and T. Nagao: A study on the effect of the embedment of cellular bulkheads on the seismic stability, Technical Note of National Institute for Land and Infrastructure Management No.352, 2006
87) NODA, S., Sosuke KITAZAWA, Takeshi IIDA, Nobuo MORI and Hiroshi TABUCHI: An Experimental Study on the Earthquake Resistance of Steel Plate Cellular Bulkheads with Embedment, Rept. of PHRI Vol.21 No.2, pp.147, 1982
88) Sugano, T., T. Kitamura, T. Morita and Y. Yui: Study on behavior of steel plate cellular bulkhead during earthquake, Proceedings of 10th Symposium on Earthquake Engineering、pp. 1867-1872, 1998.
89) Nagao, T. and T. Kitamura: Design method of cellular bulkhead against Level-one earthquake, Proceedings of Offshore Development, JSCE, Vol. 21, pp. 755-760, 2005
90) Saimura, Y., A. Morimoto and Y. Takase: Results of field measurements of soil pressure of filling of embedded steel plate cellular block, Proceedings of 36th Annual Conference of JSCE, Part 3, pp. 562-563, 1981
91) Itou, Y., O. Iimura, M. Gotou, T. Shiroe and T. Iida: Construction of embedded steel plate cellular block, Sumitomo Metals, Vol. 34, No. 2, pp. 93-105, 1982
92) PHRI, Third Port Construction Bureau and Kawasaki Steel K.K.: Report of tests of Steel plate cellular block, 1966
93) Tokikawa, K.: Experimental study on reflection coefficient of upright wave absorbing sea wall (First Report), Proceedings of 21st Conference on Coastal Engineering, JSCE, pp.409-415,1974
94) TANIMOTO, K., Suketo HARANAKA, Shigeo TAKAHASHI, Kazuhiro KOMATSU, Masahiko TODOROKI and Mutsuo OSATO: An Experimental Investigation of Wave Reflection, Overtopping and Wave Forces for Several types of Breakwaters and Sea Walls, Technical Note of PHRI No.246,p.38,1976
95) GODA, Y. and Yasuharu KISHIRA: Experiments on irregular Wave Overtopping Characteristics of Seawalls of Low Crest Types, Technical Note of PHRINo.242,p.28,1976

3 Mooring Buoys

Ministerial Ordinance

Performance Requirements for Mooring Buoys

Article 27

1 The performance requirements for mooring buoys shall be as specified in the subsequent items:

(1) The requirements specified by the Minister of Land, Infrastructure, Transport and Tourism shall be satisfied to enable the safe mooring of ships.

(2) Damage due to variable waves, water flows, traction by ships, or other damage shall not impair the function of mooring buoys nor affect their continued use.

2 In addition to the provisions of the preceding paragraph, the performance requirement of mooring buoys in the place where there is a risk of having a serious impact on human lives, property, and/or socioeconomic activity by the damage to the mooring buoys concerned shall be such that the structural stability of the mooring buoy is not seriously affected even in cases when the function of the mooring buoys concerned is impaired by tsunamis, accidental waves, and/or other actions.

Public Notice

Performance Criteria of Mooring Buoys

Article 53

1 The performance criteria of mooring buoys shall be as specified in the subsequent items:

(1) The buoy shall have the necessary freeboard in consideration of the usage conditions.

(2) The buoy shall have the dimensions required for containment of the swinging area of moored ships within the allowable dimensions.

(3) The following criteria shall be satisfied under the variable action situation in which the dominant actions are variable waves, water flow, and traction by ships.

(a) The risk of impairing the integrity of the anchoring chains, ground chains, and/or sinker chains of the floating body shall be equal to or less than the threshold level.

(b) The risk of losing the stability of the buoy due to tractive forces acting in mooring anchors shall be equal to or less than the threshold level.

2 In addition to the requirements of the preceding paragraph, the performance criteria of the mooring buoys for which there is a risk of serious impact on human lives, property, or socioeconomic activity by the damage to the facilities concerned shall be such that the degree of damage under the accidental action situation, in which the dominant action is tsunamis or accidental waves, is equal to or less than the threshold level.

[Commentary]

(1) Performance criteria of mooring buoys

① Common for mooring buoys

(a) Freeboard (usability)
In setting the freeboard in performance verification of mooring buoys, the conditions of use of the specified facility shall be properly considered.

(b) In setting the structure and cross-section dimensions for performance verification, the swinging of the floating body shall be properly considered.

(c) Safety of the facility (serviceability)

1) The setting for performance criteria of mooring buoys and the design situations excluding accidental situations shall be in accordance with **Attached Table 42**.

Attached Table 42 Setting for Performance Criteria of Mooring Buoys and Design Situations (excluding accidental situation)

Ministerial Ordinance			Public Notice			Performance requirements	Design situation			Verification item	Index of standard limit value
Article	Paragraph	Item	Article	Paragraph	Item		Situation	Dominating action	Non-dominating action		
27	1	2	53	1	3a	Serviceability	Variable	Variable waves (water flow) (traction by ships)	Self weight, water pressure, water flow	Yield of chains of floating bodies, ground chains, or sinker chains	Design yield stress
					2b					Stability of mooring anchors, etc.	Resistance force of mooring anchors, etc. (horizontal, vertical)

2) Yield of chains of floating bodies, ground chains, or sinker chains
Verification of yield of chains of floating bodies, ground chains, or sinker chains is such that the risk of the design stress corresponding to each member in chains of floating bodies, ground chains, or sinker chains to exceed the design yield stress is equal to or less than the limited values.

3) Stability of mooring anchors
Verification of the stability of mooring anchors is such that the risk of the tractive force in the mooring anchors to exceed the resistance force is equal to or less than the limited values. Mooring anchor is a general term for the equipment installed on the seabed for retaining a floating body, including sinkers.

② Mooring buoys of facilities against accidental incident (safety)

(a) The setting for performance criteria of mooring buoys of facilities against accidental incident and the design situations (only accidental situations) shall be in accordance with **Attached Table 43**.

Attached Table 43 Setting for Performance Criteria of Mooring Buoys of Facilities against Accidental Incident and Design Situations only limited to Accidental Situations

Ministerial Ordinance			Public Notice			Performance requirements	Design situation			Verification item	Index of standard limit value
Article	Paragraph	Item	Article	Paragraph	Item		Situation	Dominating action	Non-dominating action		
27	2	–	53	2	–	Safety	Accidental	Tsunami	Self weight, water pressure, water flow	Stability of mooring system	–
								Waves of extremely rare event			

[Technical Note]

3.1 Fundamentals of Performance Verification

(1) The mooring buoy shall secure appropriate stability under the mooring method, the natural conditions at the site, and the dimensions of the design ships.

(2) Mooring buoys are structurally categorized into three types; sinker type, anchor chain type, and sinker and anchor chain type. The sinker type mooring buoy comprises a floating body, anchoring chain of floating body, and sinker. It does not have a mooring anchor, as shown in **Fig. 3.1.1 (a).** The anchor chain type mooring buoy comprises a floating body, anchor chain, and mooring anchor. It does not have a sinker, as shown in **Fig. 3.1.1(b)**. Although the construction cost of this type is lower than the other types, it is not suitable for cases where the area of the mooring basin is limited, because the radius of ship's swinging motion is large. The sinker and anchor chain type mooring buoy comprises a floating body, anchoring chain, ground chain, mooring anchor, and sinker, as shown in **Fig. 3.1.1(c)**. The sinker and anchor chain type mooring buoys are being used widely in ports and harbors. This type of buoy could be used even when the area of the mooring basin is limited, because the radius of ship's swinging motion could be reduced by increasing the weight of the sinker.

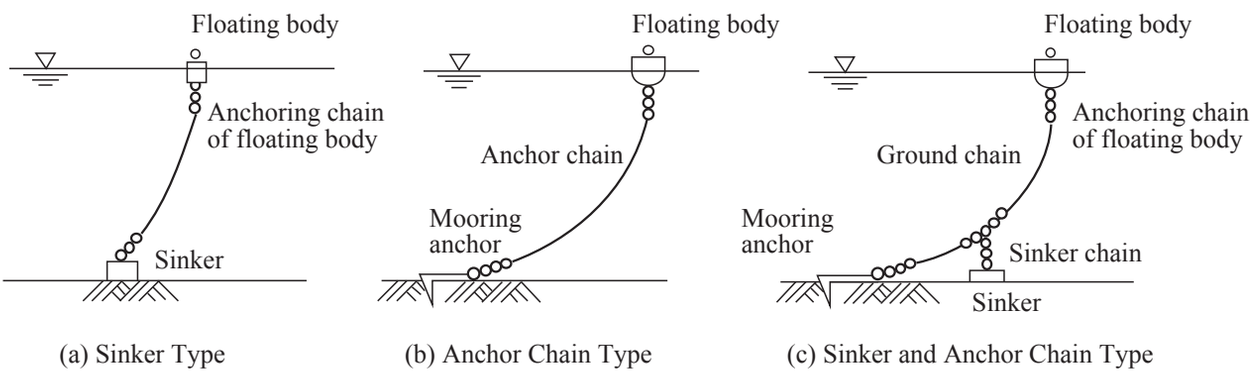

(a) Sinker Type (b) Anchor Chain Type (c) Sinker and Anchor Chain Type

Fig. 3.1.1 Types of Mooring Buoys

(3) The procedure for performance verification of mooring buoys is shown in **Fig. 3.1.2**.

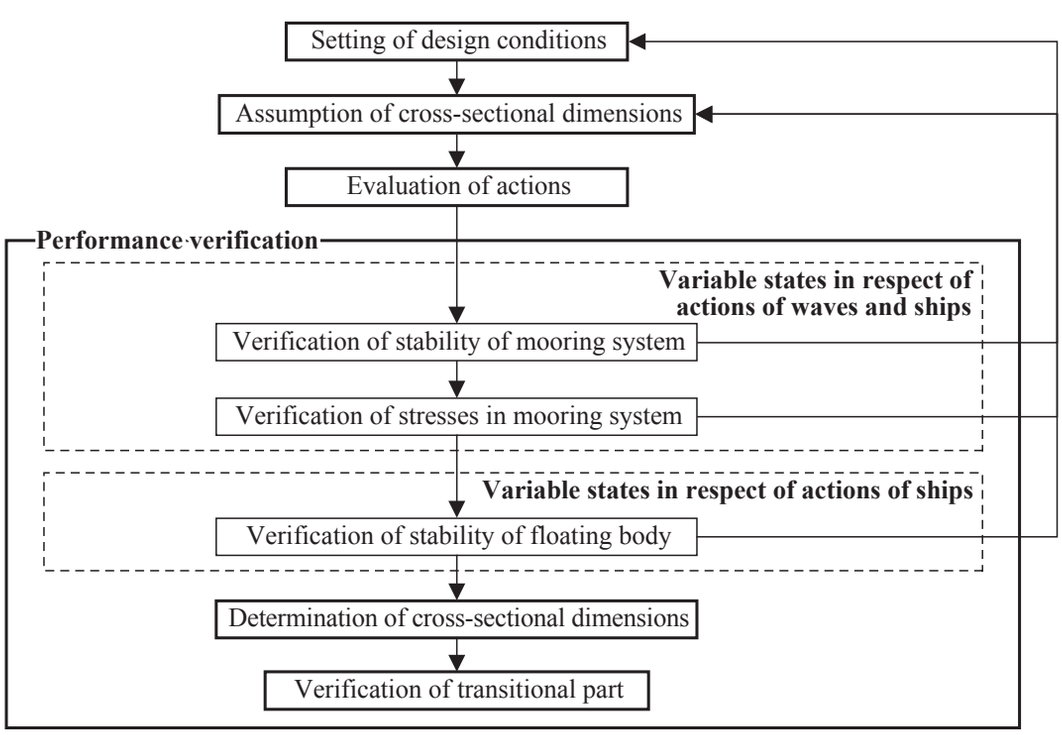

Fig. 3.1.2 Example of Sequence for Performance Verification of Mooring Buoys

(4) **Fig. 3.1.3** shows a typical schematic figure of mooring buoy.

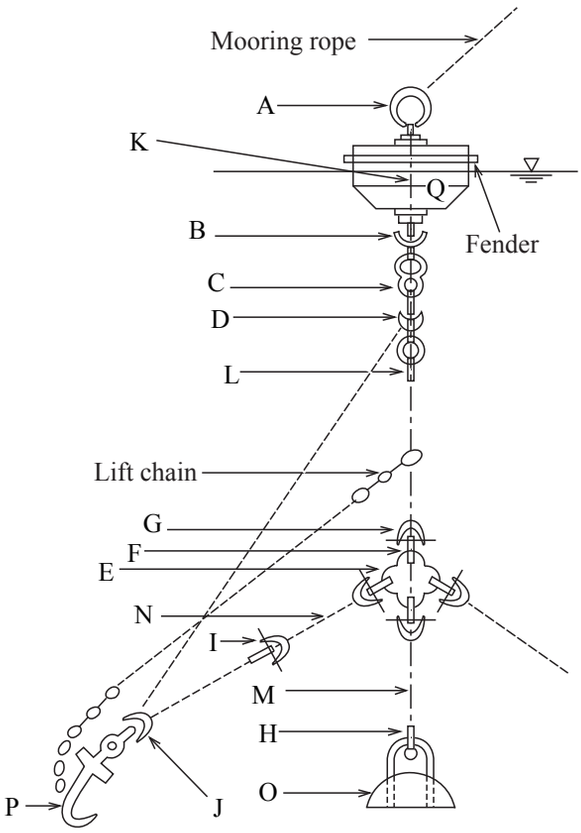

A; Harp shackle (mooring ring) or quick release hook	1
B; Anchor shackle	1
C; Swivel piece	1
D; Joining shackle	1
E; Mooring piece	1
F; Long ring	2
G; Joining shackle	2
H; Anchor shackle	1
I; Joining shackle	2
J; Anchor shackle	2
K; Chain	1
L; Main chain (Anchoring chain of floating body)	1
M; Sinker chain	1
N; Chain or ground chain	4
O; Sinker	1
P; Anchor or screw	1
Q; Buoy	1

Fig. 3.1.3 Typical Schematic Figure of Mooring Buoy

(5) The provisions in this sector can be applied to the performance verification of sinker and anchor chain type mooring buoys. Since the sinker type and anchor chain type buoys are simplified structure of the sinker and anchor chain type buoy, the provisions are applicable to their performance verifications as well.

3.2 Actions

(1) In principle, the tractive force acting on a mooring buoy can be calculated considering structural characteristics of the mooring buoy in accordance with the provisions in **Part II, Chapter 8, 2.4 Actions due to Traction by Ships**. When setting the tractive force, consideration should be given to the effects of winds, tidal currents and waves. However, it should be noted that these are dynamic loads, and thus there are many uncertainties on their relationships with the tractive forces of ships.

(2) It is preferable that the tractive force acting on a mooring buoy be determined considering the actions that exert upon moored ships such as winds, tidal currents, and waves and referring the existing tractive force data on the buoys of the similar type.

(3) When the motions of buoy due to wave actions are not negligible, their effect of motions needs to be considered in the calculation of the wave force and the resistance force.

(4) In a dynamic analysis of a floating body, the response characteristics of the floating body vary widely depending on the wave period. Therefore, if the analysis is made based on monochromatic waves only, the results would be either underestimated or overestimated. When performing a dynamic analysis of the motions of a floating body, therefore, it is preferable to employ random waves with spectral characteristics.

(5) **Table 3.2.1** shows examples of design conditions and tractive forces on mooring buoys.

Table 3.2.1 Examples of Design Conditions for Mooring Buoys

Design ship DWT (t)	Mooring method	Wind velocity (m/s)	Tidal current (m/s)	Wave height (m)	Tractive force (kN)
1,000	Single buoy	50	0.5	2.0	185
3,000		50	0.5	4.0	409
15,000		15	0.51	0.7	245
20,000		20	1.0	—	589
130,000		60	0.67	10.0	1,370
260,000		25	0.51	3.0	1,840
30,000	Dual buoy	15	—	—	1,490
100,000	6-points	20	—	1.5	1,470

3.3 Performance Verification of Mooring Buoys

(1) Mooring Anchor

① The sizes and required strengths of each part of a mooring buoy, including the mooring anchor, sinker, sinker chain, ground chain, main chain, and floating body need to be determined appropriately in accordance with the relevant provisions in **6 Floating Piers** and in consideration of the tractive forces of ships, the structure of mooring buoy, and the mooring method.

② Normally three mooring anchors are attached to a mooring buoy. In verifying the performance of a mooring buoy, however, it can generally be assumed that only one of the three anchors resists the horizontal force. It is preferable for the mooring anchors to be designed in such a way that the buoy will not capsize even when one of the anchor chains is broken down.

③ It should be assumed that the horizontal force acting on the mooring buoy is resisted only by the mooring anchors' resistance. **6 Floating Piers** may be referred to in calculating the holding power of the mooring anchors.

(2) Sinker and Sinker Chain

① Normally a sinker chain of 3 to 4 m in length is used for a mooring buoy. It is preferable not to use an excessively long sinker chain, because it makes larger range of the upward movement of the sinker and increases the risk of the tangling of the sinker chain and thus the risk of abrasion and accidental breaking of the chain. The sinker chain should be of the same diameter as that of the main chain.

② The vertical and horizontal forces acting on the sinker can be calculated based on the chain tension of floating body and the distance of horizontal movement of the floating body as calculated in accordance with **(4) Anchoring Chain of Floating Body** using equation (**3.3.1**) below.[5] In the following equations, symbol γ shall represent the partial factor for its suffix and suffixes k and d shall respectively represent characteristic values and design values.

$$P_V = T_A \sin\theta_1 = \left(T_C - w\ell\right)\sin\theta_1$$
$$P_H = T_A \cos\theta_1 = \left(T_C - w\ell\right)\cos\theta_1 \qquad (3.3.1)$$

where

P_V, P_H : vertical and horizontal forces acting on the sinker, respectively (kN)
θ_1 : angle that main chain makes with the horizontal plane at the sinker attachment point (º)
T_A : tension of main chain at the sinker attachment point (kN)
T_C : tension of main chain at the floating body attachment point (kN)
w : weight of the main chain per unit length in water (kN/m)
ℓ : length of main chain (m)

The design values in the equation can be calculated using the following equation. The partial factor can be set at 1.0.

$$T_{C_d} = \gamma_{T_C} T_{C_k}$$

θ_1 may be obtained by solving the following equations.

$$\ell = \frac{T_A \cos\theta_1}{w}\left(\tan\theta_2 - \tan\theta_1\right)$$
$$\Delta K = \frac{T_A \cos\theta_1}{w}\left\{\sinh^{-1}\left(\tan\theta_2\right) - \sinh^{-1}\left(\tan\theta_1\right)\right\} \tag{3.3.2}$$

where

ΔK : distance of horizontal movement of the floating body (m)

θ_2 : angle that main chain makes with the horizontal plane at the floating body attachment point (º)

In variable situations in respect of action of ships, the alignment of the floating body chain can be assumed as a straight line and thus the following approximation can be used:

$$\theta_2 \fallingdotseq \theta_1 = \cos^{-1}\frac{\Delta K}{\ell} \tag{3.3.3}$$

③ The weight of a sinker most commonly used for 5,000 GT ships and 10,000 GT ships are about 50kN and 80kN, respectively. The sinker weight can be determined using these values as references. The values mentioned above indicate the weight in water. Sinkers may be of any shape and material as long as they satisfy the weight requirement, but in Japan disk-shaped cast iron sinkers are used commonly and concrete is seldom used. It is said that disk-shaped cast iron sinkers with a slightly concaved bottom surface improves the adhesion of the sinker to the soft sea bottom ground significantly.

④ The role of the sinker is to absorb the impact force acting on the chain and to make the main chain shorter. When the main chain is to be shortened to reduce the distance of ship movement, therefore, the weight of the sinker must be increased accordingly.

⑤ In certain cases, buried anchors may be used instead of sinkers.

(3) Ground Chain

① The angle that the chain makes with the sea bottom at the mooring anchor attachment point is desirably smaller than 3º because the holding power of the mooring anchor decreases sharply as the angle increases beyond 3º In many cases, the weight of the ground chain is determined in such a way that the ground chain satisfies the above mentioned condition when the tractive force acts on the buoy. When the tractive force is large, the attachment angle that the mooring anchor makes with the ground chain may be made smaller using a ground chain longer than the above-mentioned value. The inclination angle θ_1 of the ground chain at the mooring anchor attachment point can be calculated by equation (**6.4.8**) described in **6.4. Performance Verification**. The symbols in equation (**6.4.8**) are redefined as follows (see **Fig. 3.3.1**):

ℓ : length of the ground chain (ℓ_g in **Fig. 3.3.1**) (m)

h : vertical distance between the upper end of the ground chain and the sea bottom, in other words the sum of the length of the sinker chain, height of the sinker, and allowance (h_g in **Fig. 3.3.1**) (m)

P_H : horizontal component of the tractive force acting on the floating body (kN)

w : weight of the ground chain per unit length in water (kN/m)

θ_2 : inclination angle of the ground chain at the upper end of the chain (º)

In this calculation, the value of θ_1 is calculated by assuming the values of ℓ_g, w, and h_g; θ_1 is desirably kept at 3º or less.

② The maximum tension T_g of the ground chain can be calculated using equation (**6.4.5**) described in **6.4 Performance Verification**. Here P_H represents the horizontal component of the tractive force of ship acting on the buoy, and θ_2 represents the inclination angle of the ground chain at the upper end of the chain.

③ The tensile yield strength of chain can be set based on **6 Floating Piers**. In the case of mooring buoys, however, the diameter of chain is usually determined not only on the basis of strength, but on the basis of comprehensive analysis that elaborating such measures to reduce forces acting on the chain as the use of a heavier chain to absorb the energy of impact forces, and as known from equation **(6.4.8)** in **6.4 Performance Verification** the use of a shorter chain to reduce the radius of the vessel's swinging motion. In general, the chain diameter is designed in such a way that the maximum tension to be exerted upon the chain is equal to 1/5 to 1/8 of the maximum strength.

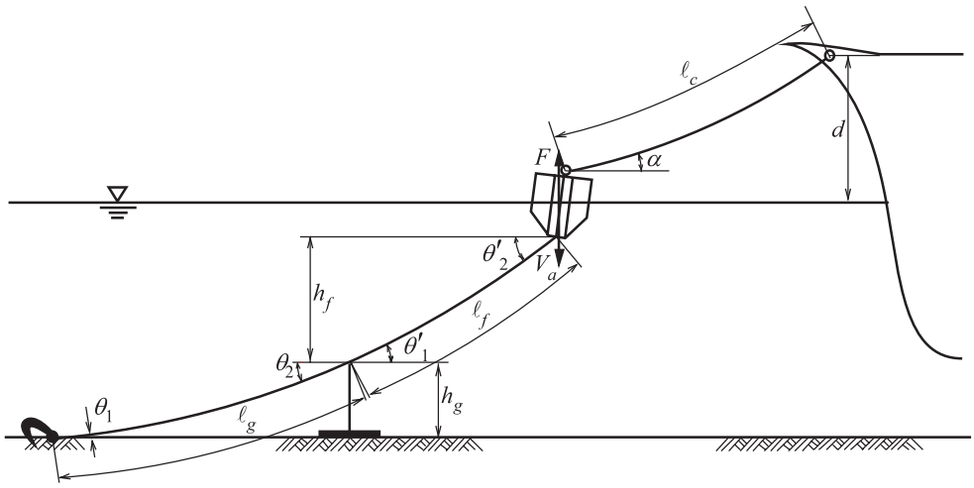

Fig. 3.3.1 Notation for Sinker and Anchor Chain Type Mooring Buoy

(4) Anchoring Chain of Floating Body

① It is preferable to determine the length ℓ_f of the anchoring chain of floating body in such a way to lessen the tension acting on both the anchoring chain of floating body and the mooring hawser as well as to reduce the radius of the ship's swinging motion. The ratio of the anchoring chain length to the water depth may affect the degree of abrasion of the anchoring chain, but their relationship has not been clarified yet.

② It is preferable that the tension acting on the main chain and the displacement of the floating body be derived by means of a simulation analysis, but the results under similar conditions in the past may also be used to determine the tension and displacement. Or these may be calculated using the method described below.

③ The weight of the main chain per unit length in water w_f (kN/m) can be calculated using equation (**6.4.8**) described in **6.4 Performance Verification**.

Here, ℓ and h of this equation represent the length of the anchoring chain (ℓ_f in **Fig. 3.3.1**) (m) and the vertical distance between the upper and lower ends of the anchoring chain (h_f in **Fig. 3.3.1**) (m), respectively. In other words, h is the vertical distance between the floating body attachment point and the upper end of the sinker chain with the sinker being lifted up to the point where the bottom of the sinker is completely separated from the sea bottom surface. The force P represents the horizontal component (kN) of the tractive force acting on the buoy, and θ_2 and θ_1 represent the inclination angles (°) of the main chain at the upper and lower ends, respectively (θ_2' and θ_1' in **Fig. 3.3.1**).

The inclination angle θ_1' of the anchoring chain at the lower end of the chain can be calculated as shown in **Fig. 3.3.2** from the conditions of balance among the anchoring chain lower end tension T_{fv}, the ground chain upper end tension T_g, and the sinker chain upper end tension T_{sv}, where T_{sv} is equal to the summation of the weight of the sinker and sinker chain in water. The tension T_g and its direction are calculated in accordance with **(3) Ground Chain**.

④ It is preferable to calculate the tension of the anchoring chain at the upper end using equation (**6.4.8**) described in **6.4 Performance Verification**. Here the horizontal component of the tractive force can be used as the horizontal external force. The angle θ_2 that the floating body chain makes with the horizontal plane at the floating body attachment point can be calculated by equation (**6.4.8**) described in **6.4 Performance Verification** with the previously calculated weight of the anchoring chain per unit length in water. In general, This tension is used to verify the stress on the anchoring chain.

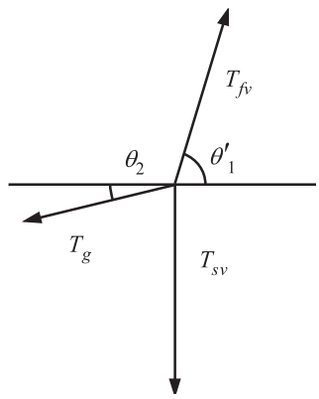

Fig. 3.3.2 Schematic Chart for Tension of Anchoring Chain

⑤ The horizontal displacement ΔK of the floating body can be calculated by means of equation (**6.4.9**) described in **6.4 Performance Verification**. Here θ_1' and θ_2' of the equation are defined below.

θ_1 : angle that the anchoring chain makes with the horizontal plane at its lower end (θ_1' in **Fig. 3.3.1**) (º)

θ_2 : angle that the anchoring chain makes with the horizontal plane at its upper end (θ_2' in **Fig. 3.3.1**) (º)

The resultant value of displacement should be examined in comparison with the area of the mooring basin. If it is found too large, the anchoring chain need to be shortened, the weight of the sinker need to be increased, or the unit length weight of the anchoring chain need to be increased.

(5) Floating Body

In variable situations in respect of the action of ships, the floating body should be designed in such a way that it does not submerge. Even when no ship is moored, the floating body should be afloat with a freeboard equal to 1/2 to 1/3 of its height. It must be afloat the water surface under the condition that the anchoring chain, and in some cases part of the ground chain and sinker chain, are suspended beneath it. It is preferable to set the buoyancy to meet these two requirements. The floating body buoyancy required to meet the first requirement can be calculated by equation (**3.3.4**).

$$F = V_a - \frac{P}{\sqrt{\left(\frac{\ell_c}{d}\right)^2 - 1}} \tag{3.3.4}$$

where

F : required buoyancy of the floating body (kN)

V_a : vertical force acting on the floating body (kN), this is calculated by means of equation (**6.4.6**) described in **6.4 Performance Verification**.

P : tractive force (kN)

ℓ_c : length of the mooring hawser (m)

d : vertical distance between the ship's hawser hole and the water surface (m)

However, the total buoyancy that is actually required is the sum of the buoyancy required to resist the tractive force and the self weight of the floating body.

References

1) Yoneda, K.: Wind tunnel experiment on drifting motion of buoy moored ship, Proceedings of 28th Conference of Japan Institute of Navigation, (mooring buoy- process for standardization- reference), 1962
2) SUZUKI, Y.: Study on the Design of Single Point Buoy Mooring, Technical Note of PHRI No.829, 1996
3) HIRAISHI, Y. and Yasuhiro TOMITA: Model Test on Countermeasure to Impulsive Tension of Mooring Buoy, Technical Note of PHRI No.816, p.18,1995
4) JSCE Edition: Commentary of guideline for design of offshore structure (Draft), 1973
5) Dep. Of the Navy Bureau of Yards & Docks: Mooring Guide, Vol.1, p.61, 1954

4 Mooring Piles

Ministerial Ordinance

Performance Requirements for Mooring Piles

Article 28
The performance requirements for mooring piles shall be as specified in the subsequent items:

(1) The requirements specified by the Minister of Land, Infrastructure, Transport and Tourism shall be satisfied so as to enable the safe mooring of ships.

(2) The damage due to berthing, traction by ships, and/or other actions shall not impair the function of the mooring piles nor affect their continued use.

Public Notice

Performance Criteria of Mooring Piles

Article 54
The performance criteria of mooring piles shall be as specified in the subsequent items:

(1) The mooring piles shall have the dimensions required for the usage conditions.

(2) The following criteria shall be satisfied under the variable action situation in which the dominant action is ship berthing or traction by ships:

(a) In the case of mooring piles having a superstructure, the risk of impairing the integrity of the superstructure members shall be equal to or less than the threshold level.

(b) The risk that the axial forces acting on the piles may exceed the resistance capacity due to failure of the ground shall be equal to or less than the threshold level.

(c) The risk that the stress in the piles may exceed the yield stress shall be equal to or less than the threshold level.

[Commentary]

(1) Performance Criteria of Mooring Piles

① Facility stability (serviceability)

(a) The setting for performance criteria of mooring piles and the design situations excluding accidental situations shall be in accordance with **Attached Table 44**.

Attached Table 44 Setting for Performance Criteria of Mooring Piles and Design Situations (excluding accidental situations)

Ministerial Ordinance			Public notice			Performance requirement	Design situation			Verification item	Index of standard limit value
Article	Paragraph	Item	Article	Paragraph	Item		Situation	Dominating action	Non-dominating action		
28	1	2	54	1	2a	Serviceability	Variable	Berthing and traction by ships	Self weight	Failure of superstructure*1)	Design ultimate capacity of section (ultimate limit state)
					2b					Axial forces in piles	Resistance capacity based on failure of the ground (pushing forces, pulling forces)
					2c					Yielding of pile	Design yield stress

*1) Only for structures with a superstructure.

(b) Failure of the superstructure
Verification of failure of the superstructure is such that the risk that the design cross-sectional forces in the superstructure will exceed the design cross-sectional resistance is equal to or less than the limit values.

(c) Axial forces in piles
Verification of axial forces in piles is such that the risk that the axial force on a pile will exceed the resistance capacity based on the failure of the ground is equal to or less than the limited values.

(d) Yielding of a pile
Verification of pile yielding is such that the risk that the design stress in a pile will exceed the design yield stress is equal to or less than the limit values.

5 Piled Piers

Ministerial Ordinance

Performance Requirements for Piled Piers

Article 29

1 The performance requirements for piled piers shall be as specified in the subsequent items in consideration of the structure types:

(1) The requirements specified by the Minister of Land, Infrastructure, Transport and Tourism shall be satisfied so as to enable the safe and smooth berthing of ships, embarkation and disembarkation of people, and handling of cargo.

(2) Damage to the piled pier due to self weight, earth pressure, Level 1 earthquake ground motions, berthing and traction by ships, imposed load and/or other actions shall not impair the functions of the pier concerned and not adversely affect its continued use.

2 In addition to the provisions of the previous paragraph, the performance requirements for piled piers which are classified as high earthquake-resistance facilities shall be such that the damage due to Level 2 earthquake ground motions and other actions do not affect the restoration of the functions required of the piers concerned in the aftermath of the occurrence of Level 2 earthquake ground motions. Provided, however, that as for the performance requirements for the piled pier which requires further improvement in earthquake-resistant performance due to environmental conditions, social or other conditions to which the pier concerned is subjected, the damage due to said actions shall not adversely affect the restoration through minor repair works of the functions of the pier concerned and its continued use.

Public Notice

Performance Criteria of Piled Piers

Article 55

1 The provisions of Article 48 shall be applied to the performance criteria of piled piers with modification as necessary.

2 In addition to the requirements of the preceding paragraph, the performance criteria of piled piers shall be as specified in the subsequent items:

(1) The access bridge of a piled pier shall satisfy the following criteria.

(a) It shall have the dimensions required for enabling the safe and smooth loading, unloading, embarkation and disembarkation, and others in consideration of the usage conditions.

(b) It shall not transmit the horizontal loads to the superstructure of the piled pier, and it shall not fall down even when the piled pier and the earth-retaining part are displaced owing to the actions of earthquakes or similar one.

(2) The following criteria shall be satisfied under the variable action situation in which the dominant actions are Level 1 earthquake ground motions, ship berthing and traction by ships, and imposed load:

(a) The risk of impairing the integrity of the members of the superstructure shall be equal to or less than the threshold level.

(b) The risk that the axial forces acting in the piles may exceed the resistance capacity owing to failure of the ground shall be equal to or less than the threshold level.

(c) The risk that the stress in the piles may exceed the yield stress shall be equal to or less than the threshold level.

(3) The following criteria shall be satisfied under the variable action situation in which the dominant action is variable waves:

(a) The risk of losing the stability of the access bridge due to uplift acting on the access bridge shall be equal to or less than the threshold level.

(b) The risk of impairing the integrity of the members of the superstructure shall be equal to or less than the threshold level.

(c) The risk that the axial forces acting in piles may exceed the resistance capacity owing to failure of

the ground shall be equal to or less than the threshold level.

(4) In the case of structures having stiffening members, the risk of impairing the integrity of the stiffening members and their connection points under the variable action situation in which the dominant actions are variable waves, Level 1 earthquake ground motions, ship berthing and traction by ships, and imposed load shall be equal to or less than the threshold level.

3 The provisions of Article 49 through Article 52 shall be applied with modification as necessary to the performance criteria of the earth-retaining parts of piled piers in consideration of the structural type.

[Commentary]

(1) Performance Criteria of Piled Piers

① Performance criteria of piled piers

(a) Open-type wharves on vertical piles

1) The setting of the performance criteria of piled piers of earthquake-resistance facilities of open-type wharves on vertical piles and the design conditions only limited to accidental situation shall be in accordance with **Attached Table 45**. The restorability and serviceability of the performance requirements in **Attached Table 45** varies depending on the type of earthquake-resistance facility.

Attached Table 45 Setting the Performance Criteria of Piled Piers of Earthquake-resistance Facilities and Design Situations only limited to Accidental Situations

Ministerial Ordinance			Public Notice			Performance requirements	Design situation			Verification item	Index of standard limit value
Article	Paragraph	Item	Article	Paragraph	Item		Situation	Dominating action	Non-dominating action		
29	2	2	55	1	–	Restorability and Serviceability	Variable	L2 earthquake ground motion	Self weight, surcharges	Deformation of face line	Limit value of residual deformation
										Cross-sectional failure of the superstructure	Design cross-sectional resistance (ultimate limit condition)
										Full plasticity of piles	Fully plastic state moment
										Axial forces in the piles	The resistance capacity due to failure of the soil (pushing and pulling)

2) High earthquake-resistance facilities specially designated (emergency supply transport) (serviceability)

- Deformation of face line
  The limit value for the deformation of the face line of quays applies to those of gravity-type mooring quays.
- Cross-sectional failure of the superstructure
  Verification of cross-sectional failure of the superstructure is such that the risk that the design cross-sectional forces in the superstructure will exceed the design cross-sectional resistance is equal to or less than the limit values.
- Full plasticity of piles
  Verification of full plasticity of piles is such that fully plastic state shall not occur at two or more locations on a pile among the piles comprising the piled pier. Attainment of full plasticity in a pile means the condition where the flexural moment acting on a pile reaches the moment to cause fully plastic.
- Axial forces in the piles
  Verification of the axial forces acting in the piles is such that the risk that the axial force acting in a pile will exceed the resistance capacity due to the failure of the soil is equal to or less than the limited values.

3) High earthquake-resistance facilities specially designated (trunk line cargo transport) (restorability)
The performance criteria of piled piers for high earthquake-resistance facilities (designated (for

transport of main cargo)) of open-type wharves on vertical piles shall satisfy the performance criteria of high earthquake-resistance facilities (designated (for transport of emergency goods)).

4) High earthquake-resistance facilities (standard (for transport of emergency goods)) (restorability)

- Setting of the performance criteria for the piled piers of high earthquake-resistance facilities (standard (emergency supply transport)) of open-type wharves on vertical piles and the design conditions only limited to accidental situation shall comply with setting of the performance criteria of high earthquake-resistance facilities (designated (emergency supply transport)) and the design conditions, except for only the verification items for full plasticity of piles.
- Full plasticity of piles
  The verification of full plasticity of piles is such that full plasticity does not occur at more than two points on a pile among the piles comprising the piled pier. The state of reaching the full plasticity means that the flexural moment acting on a pile reaches the moment to cause fully plastic state.

(b) Open-type wharves with a coupled raking piles
The performance criteria of piled piers of high earthquake-resistance facilities of open-type wharves with coupled raking piles shall apply the performance requirements of high earthquake-resistance facilities of open-type wharves on vertical piles. The performance criteria of raking piles of open-type wharves with coupled raking piles shall apply the performance criteria of piles in open-type wharves on vertical piles.

(c) Structures with stiffening members
The performance criteria of piled piers of high earthquake-resistance facilities of structures with stiffening members shall apply the performance criteria of high earthquake-resistance facilities of open-type wharves on vertical piles.

② Main structure of piled piers

(a) The variable situation where dominating actions are the Level 1 earthquake ground motion, berthing and traction by ships and surcharges (serviceability)

1) The setting for the performance criteria of piled piers and design conditions excluding accidental situations shall be as follows, in accordance with the structure type and the structural members.

2) Open type wharves on vertical piles

i) Performance criteria of the superstructure

- The performance criteria of the superstructure of open-type wharves on vertical piles and the design conditions excluding accidental situations shall be as shown in **Attached Table 46**.

Attached Table 46 Setting of Performance Criteria of Superstructure of Piled Piers and Design Situations (excluding accidental situations)

Ministerial Ordinance			Public Notice			Performance requirements	Design situation			Verification item	Index of standard limit value
Article	Paragraph	Item	Article	Paragraph	Item		Situation	Dominating action	Non-dominating action		
29	1	2	55	2	2a	Serviceability	Variable	Berthing and traction by ships	Self weight, surcharges	Cross-sectional failure of superstructure	Design cross-sectional resistance (ultimate limit state)
								L1 earthquake ground motion	Self weight, surcharges		
								Surcharges (including surcharges during cargo handling)	Self weight, Wind acting on cargo handling equipment and ships		
					2b			Surcharges (including surcharges during cargo handling)	Self weight, wind acting on cargo handling equipment and ships	Serviceability of superstructure cross-section	Limit value of bending crack width (serviceability limit state)
								Repeatedly applied surcharges	Self weight	Fatigue failure of superstructure	Design fatigue strength (Fatigue limit state)
					3b			Variable waves	Self weight	Cross-sectional failure of superstructure	Design cross-sectional resistance (ultimate limit state)

- Cross-sectional failure of the superstructure
  Verification of cross-sectional failure of the superstructure is such that the risk that the design cross-sectional forces in the superstructure will exceed the design cross-sectional resistance is equal to or less than the limit value.
- Serviceability of the cross-section of the superstructure
  Verification of the serviceability of the cross-section of the superstructure is such that the risk that width of bending cracks in the superstructure will exceed the limit value of crack width is equal to or less than the limit values.
- Fatigue failure of the superstructure
  Verification of fatigue failure of the superstructure is such that the risk the design variable cross-sectional forces in the superstructure will exceed the design fatigue strength is equal to or less than the limit values.

ii) Performance criteria of piles
The setting of the performance criteria of the piles of open-type wharves on vertical piles and the design conditions excluding accidental situations shall be as shown in **Attached Table 47**.

Attached Table 47 Setting of Performance Criteria of Piles of Piled Piers and Design Situations (excluding accidental situations)

Ministerial Ordinance			Public Notice			Performance requirements	Design situation			Verification item	Index of standard limit value
Article	Paragraph	Item	Article	Paragraph	Item		Situation	Dominating action	Non-dominating action		
29	1	2	55	2	2b	Serviceability	Variable	Berthing, traction by ships	Self weight, surcharges	Axial forces in piles	Load resistance due to soil failure (pushing, pulling)
								L1 earthquake ground motion	Self weight, surcharges		
								Surcharges (including surcharges during cargo handling)	Self weight, wind acting oncargo handling equipment and ships		
					2c			Berthing and traction by ships	Self weight, surcharges	Yielding of piles	Failure probability of variable situations of berthing and traction by ships (seismically high earthquake-resistance facilities: P = 9.1×10-4) (facilities other than high earthquake-resistance facilities: P = 1.9×10-3)
								L1 earthquake ground motion	Self weight, surcharges		Failure probability of variable situation of level 1 earthquake (high earthquake-resistance facilities (specially designated): P = 1.3×10-4) (high earthquake-resistance facilities (standard): P = 3.8×10-3) (facilities other than high earthquake-resistance facilities: P = 1.4×10-2)
								Surcharges (including surcharges during cargo handling)	Self weight, wind acting on cargo handling equipment and ships		Complies with failure probability of variable situation conditions of berthing and traction by ships
					3c			Variable waves	Self weight	Axial forces acting in piles	Load resistance due to failure of the soil (pushing and pulling)

- Axial forces acting on piles
  Verification of the axial forces acting on a pile is such that the risk that the axial force acting on a pile will exceed the resistance force due to failure of the soil is equal to or less than the limit values.
- Yielding of piles
  Verification of yielding in piles is such that the risk that the design stress in a pile will exceed the design yield stress is equal to or less than the limit values.

iii) Performance criteria of access bridges

- The setting of the performance criteria of access bridges of open-type wharves on vertical piles and the design conditions excluding accidental situations shall be as shown in **Attached Table 48**.

Attached Table 48 Setting of Performance Criteria of Access Bridges of Open-type Wharves on Vertical Piles and Design Situations (excluding accidental situations)

Ministerial Ordinance			Public Notice			Performance requirements	Design situation			Verification item	Index of standard limit value
Article	Paragraph	Item	Article	Paragraph	Item		Situation	Dominating action	Non-dominating action		
29	1	2	55	2	3a	Serviceability	Variable	Variable waves	Self weight	Uplift force on access bridge	Design cross-sectional resistance (ultimate limit state)

3) Open-type wharves with coupled raking piles
Performance criteria of open-type wharves with coupled raking piles shall apply the performance criteria of open-type wharves on vertical piles.

4) Piled piers of structures with stiffening members

i) Performance criteria of piled piers of structures with stiffening members shall be as shown in **Attached Table 49**, as well as complying with the performance criteria of open-type wharves on vertical piles. The items within parentheses in the column of "Design situation" in **Attached Table 49** may be applied individually.

Attached Table 49 Setting of Performance Criteria of Piled Piers of Structures with Stiffening Members and Design Situations (excluding accidental situations)

Ministerial Ordinance			Public Notice			Performance requirements	Design situation			Verification item	Index of standard limit value
Article	Paragraph	Item	Article	Paragraph	Item		Situation	Dominating action	Non-dominating action		
29	1	2	55	2	4	Serviceability	Variable	Berthing and traction by ships (L1 earthquake ground motion) (Surcharges (including surcharges during cargo handling))	Self weight, surcharges (Self weight, surcharges) (Self weight, surcharges, and wind acting on ships)	Yielding of stiffening members Failure of connections at joints	Design yield stress Design shear force resistance
										Punching shear failure at joints	Design shear force resistance
										Punching shear failure at joints	Design shear force resistance
								Repeatedly acting surcharges	Self weight	Fatigue failure of joints	Design fatigue strength (fatigue limit state)
								Variable waves	Self weight	Failure of connections at joints	Design shear force resistance

ii) Yielding of stiffening members
Verification of yielding of the stiffening members is such that the risk that the stress in a stiffening member will exceed the yield stress is equal to or less than the limit values.

iii) Failure of the connections at joints
Verification of failure of the connections at joints is such that the risk that the design shear force at a joint will exceed the design shear strength is equal to or less than the limit value.

iv) Push through shear failure of joints
Verification of push through shear failure of joints is such that the risk that the push through shear force at a joint will exceed the design shear resistance of a joint is equal to or less than the limit value.

v) Fatigue failure of joints
Verification of fatigue failure of joints is such that the risk that the design fluctuating cross-sectional force at a joint will exceed the design fatigue strength is equal to or less than the limit values.

③ Earth-retaining sections of piled piers

(a) Compliance with the performance criteria of quaywalls
Setting for the performance criteria for each of the structural types of quays in accordance with Article 49 “performance criteria of gravity-type quaywalls” through Article 52 “performance criteria of cell type quaywalls” shall comply with the setting for performance criteria of the earth-retaining sections of piled piers.

[Technical Note]

5.1 Common Items for Piled Piers

(1) The performance verification of piled piers in common may be in accordance with **2.1 Common Items for Quaywalls**.

(2) The structural types of piled piers include open-type wharves on vertical piles, open-type wharves on coupled raking piles, jacket type piers and strutted frame type pier.

(3) An example of the procedure of the performance verification of piled piers is shown in **Fig. 5.1.1**.

(4) Access Bridges
In setting the structure and cross-sectional dimensions of access bridges in the performance verification of piled piers, it is necessary to appropriately consider the conditions of use of the concerned piers, in order that the piled pier can be safely and efficiently used.
Also, in setting the structure and cross-sectional dimensions of access bridges in the performance verification of piled piers, it is necessary to appropriately consider the amount of relative deformation between the main structure of the piled pier and the earth-retaining section, and also the allowable horizontal displacement of the access bridge.

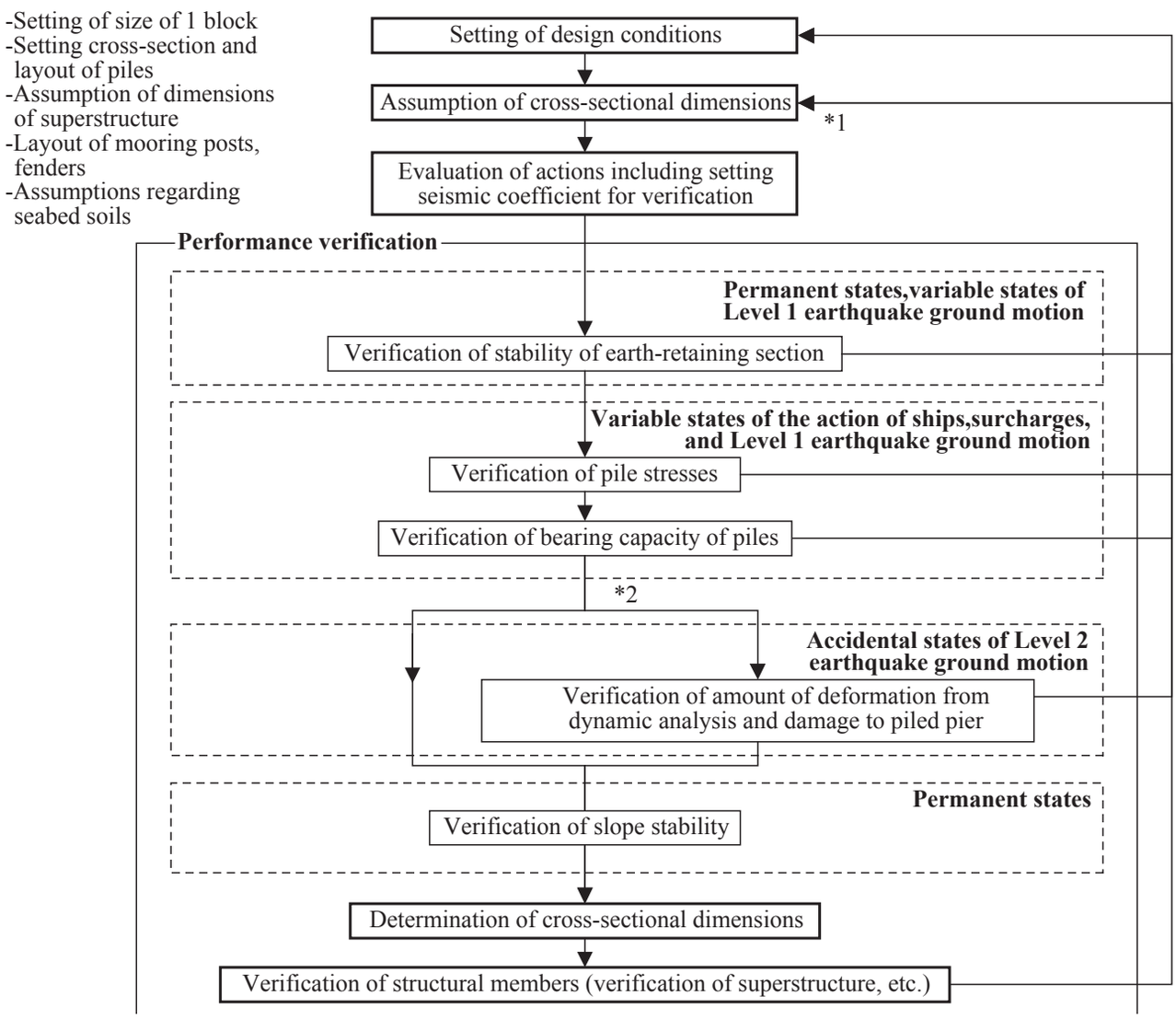

*1: Evaluation of the effect of liquefaction and settlement is not shown on the diagram, so it is necessary to separately into consider.
*2: Verification shall be carried out for high earthquake-resistance facilities against the Level 2 earthquake ground motion.

Fig. 5.1.1 Example of the Sequence of Performance Verification of a Piled Pier

5.2 Open-type Wharves on Vertical Piles

5.2.1 Fundamentals of Performance Verification

(1) The following refers to open-type wharves on vertical piles using steel pipe piles or steel sections, but it may also be applied to similar facilities provided that their dynamic characteristics are taken into account.

(2) For the procedure of performance verification of open-type wharves on vertical piles, it is possible to refer to **Fig. 5.1.1** of **5.1 Common Items for Piled Piers**. However, evaluation of the effect of liquefaction is not shown in **Fig. 5.1.1**, so it is necessary to appropriately investigate the potential for liquefaction and measures against it, (refer to **Part II, Chapter 6 Ground Liquefaction**).

(3) In the performance verification of open-type wharves on vertical piles, normally the cross-section is set with respect to actions other than that of Level 2 earthquake ground motion, while the seismic performance is verified with respect to Level 2 earthquake ground motion. This is because for verification of variable situation in respect of the action of ships and Level 1 earthquake ground motion, the performance verification is carried out based on the yield stress for the steel pipe piles, but for seismic performance verification of seismic-resistant with respect to Level 2 earthquake ground motion, a verification method that takes the extent of damage to the piled pier into account is used.

(4) For the variable situation in respect of Level 1 earthquake ground motion, it is possible to carry out verification by obtaining the natural periods of the piled pier based on a frame analysis, and then calculating the seismic coefficient for verification using the obtained natural periods and the acceleration response spectrum. However, for high earthquake-resistance facilities, verification may be carried out using an appropriate dynamic analysis method, such as nonlinear seismic response analysis taking into account the 3-dimensional dynamic interaction effect between piles and the ground. For open-type wharves on vertical piles other than high earthquake-resistance facilities, it is possible to omit the verification of the accidental situation for Level 2 earthquake ground motion.

(5) An example of cross-section of an open type piled pier on vertical piles is shown in **Fig. 5.2.1**.

(6) When cargo handling equipment, such as container cranes, is to be installed on an open-type wharf on vertical piles, it is preferable to install it in such a way that all of its feet are positioned on either the pile-supported section or earth-retaining section. If, for example, one foot of a cargo handling equipment is positioned on the pile-supported section and another on the earth-retaining section, the equipment becomes susceptible to adverse effects by uneven settlement and ground motions, due to the difference in the response characteristics of the two sections. When it is unavoidable to position one foot on the pile-supported section and another on the earth-retaining section, sufficient foundation work such as foundation piles should be provided to prevent uneven settlement due to the settlement on the earth-retaining section. In this case, in general, the fixed foot of cargo handling equipment such as portal crane should not be installed. When installing cargo handling equipment, such as container cranes, seismic response analysis should be performed, taking into consideration the coupled oscillation of the cargo handling equipment and the open-type wharf.

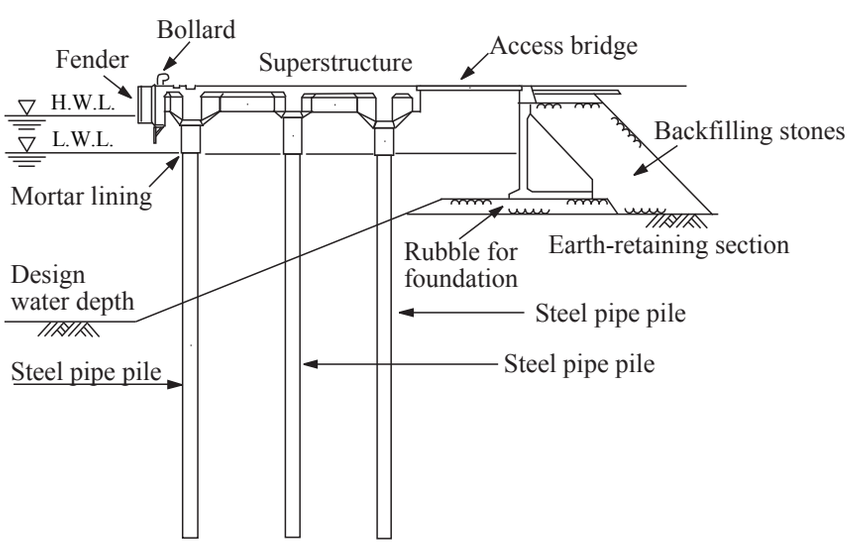

Fig. 5.2.1 Example of Cross-section of an Open Type wharf on Vertical Piles

5.2.2 Setting of Basic Cross-section

(1) The size of a deck block, the distances between piles, and the number of pile rows shall be determined appropriately in consideration of the following:
① apron width
② location of sheds
③ seabed, especially slope stability
④ existing revetments
⑤ matters related to construction work such as the concrete casting capacity
⑥ surcharges, especially crane specifications

(2) In such a case that large quay cranes for ships of 10,000 ton class are to be installed, piles are usually designed to be placed by 5m with 3-4 pile rows in the cross-section.

(3) The dimensions of the superstructure of open-type wharf shall be determined appropriately considering the following
① distances between piles, number of pile rows, and the shape and dimensions of piles
② construction problem of shattering forms and scaffold
③ ground conditions
④ arrangement of mooring posts
⑤ arrangement, shape and dimensions of fenders

(4) Assumptions regarding the Seabed Condition

① Determination of gradient of slope

(a) When an earth-retaining structure is provided behind the slope, the position of the earth-retaining structure should be appropriately determined considering the stability of the slope.

(b) It is necessary to examine the stability of slope with respect to circular slip failure. When an earth-retaining structure is installed behind the slope, it is preferable that the structure is not constructed in front of the slope surface from the toe of the slope at the slant angle indicated by equation **(5.2.1)** (see **Fig. 5.2.2**).

$$\alpha = \phi - \varepsilon \tag{5.2.1}$$

where,
α : angle between the slope and the horizontal surface (°)
ϕ : angle of shear resistance of the main material forming the slope (°)
$\varepsilon = \tan^{-1} k_h'$
k_h' : apparent horizontal seismic coefficient

For the seismic coefficient for verification for calculating the apparent horizontal seismic coefficient, the value calculated in the analysis of the earth-retaining section may be used. Refer to **(10)**⑥ below for calculation of the seismic coefficient for verification for the earth-retaining section. In addition, when the slope is composed of a hard mudstone or rock, equation **(5.2.1)** may not be applied.

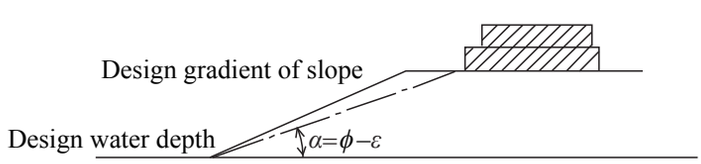

Fig. 5.2.2 Position of Earth Retaining Structure on the Slope

② Virtual Ground Surface

(a) In calculation of lateral resistance and bearing capacity of piles, a virtual ground surface shall be assumed at an appropriate elevation for each pile.

(b) When the inclination of the slope is considerably steep, the virtual ground surface for each pile to be used in the calculation of lateral resistance or bearing capacity may be set at an elevation that corresponds to 1/2 of the vertical distance between the surface of the slope at the pile axis and the seabed as shown in (**Fig. 5.2.3**).

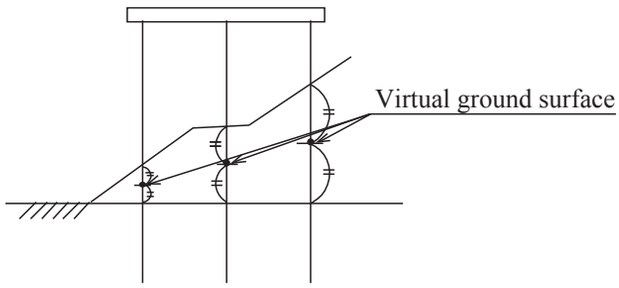

Fig. 5.2.3 Virtual Ground Surface

(5) Coefficient of Lateral Subgrade Reaction

① In the calculation of the lateral resistance of piles, it is preferable to obtain the coefficient of lateral subgrade reaction of the subsoil through lateral loading tests of piles in-situ. In case that no tests are conducted, it may be estimated by means of appropriate analytical methods derived from lateral resistance tests.

② There are some measured data available on the coefficient of lateral subgrade reaction obtained by the tests in which the lateral loads were applied to piles up to the yield points as observed in the case of piles of open-type wharves. Although some of these data have been related to the *N*-value, the coefficient of lateral subgrade reaction cannot be estimated accurately from the *N*-value. Thus, it is preferable to estimate the coefficient by lateral loading tests in-situ.

③ When lateral loading tests of piles are not carried out due to small scale construction works or time constraints, the coefficient of lateral subgrade reaction of the subsoil may unwillingly use the mean value of the minimum value and central value obtained from lateral resistance tests. When using Chang's method, equation (**5.2.2**) may be utilized and **Chapter 2, 2.4.5 [4] Estimation of Pile Behavior using Analytical Methods** can be referenced. However, some in-situ measurement data indicate that the coefficient value of lateral subgrade reaction of rubble stones is smaller than the estimate by equation (**5.2.2**) with Chang's method. In this case it is recommended to set the coefficient of lateral subgrade reaction equal to 3.0-4.0 N/cm^2 in Chang's method.

$$k_{CH} = 1.5N \tag{5.5.2}$$

where

k_{CH} : coefficient of horizontal subgrade reaction (N/cm^3)
N : average *N*-value of the ground down to a depth of about $1/\beta$
β : refer to **(6) Virtual Fixed Point**

The coefficient of lateral subgrade reaction shown in equation **(5.2.2)** is a static coefficient of subgrade reaction, and may be used when calculating the natural periods of piled piers by frame analysis. There is not much knowledge regarding the coefficient of subgrade reaction to be considered when carrying out the verification of seismic response analysis, hence there is a problem in applying equation **(5.2.2)** to dynamic analysis. Therefore it is preferable to set the coefficient equal to about double the value obtained from equation **(5.2.2)**.

(6) Virtual Fixed Point

With respect to an open-type wharf on vertical piles, the virtual fixed points of the piles may be considered to be located at a depth of $1/\beta$ below the virtual ground surface. The value of β is calculated by equation (**5.2.3**).

$$\beta = \sqrt[4]{\frac{k_{CH} D}{4EI}} \quad (\mathrm{cm}^{-1}) \tag{5.2.3}$$

where

k_{CH} : lateral subgrade reaction coefficient (N/cm^3) calculated by equation **(5.2.2)**
D : diameter or width of the pile (cm)
EI : flexural rigidity of the pile (N·cm^2)

5.2.3 Actions

(1) For the calculation of the self weight of reinforced concrete superstructures, each part of the dimensions is assumed based on the dimensions of the superstructure, and the volume is calculated on them. The self weight can be obtained by multiplying unit weight obtained from **Part II, Chapter 10, 2 Self weight** by the volume. In addition, for the calculation of the self weight of reinforced concrete superstructures, 21kN per 1.0m^2 of deck area of the superstructure of the piled pier may be assumed.

(2) At the site expected to be subject to waves, the following items should be examined regarding wave uplift on the super structure of piled pier and the access bridge.

① Stability of the access bridges and pulling resistance of piles against uplift.

② Member strength of the superstructures and access bridges against uplift.
For uplift, refer to **Part II, Chapter 2, 4.7.4(1) Uplift Acting on Horizontal Plates near the Water Surface**.

(3) The static loads may be determined in accordance with **Part II, Chapter 10, 3.1 Static Load**. The earthquake inertia forces due to static loads may normally be considered to act on the upper surface of the deck slab. However, when the center of gravity of the static loads is located at an especially high elevation, it is important to take the height of the center of gravity as the point of application of the horizontal force.

(4) Live loads should be determined in accordance with **Part II, Chapter 10, 3.2 Live Load**. The seismic force due to a rail mounted crane should be calculated by multiplying its self weight by the seismic coefficient for verification, and the force can be considered to be transmitted from the wheels of the crane to the pile-supported section. It is also necessary to carry out seismic response analysis considering the coupled oscillations of the cargo handling equipment and the open-type wharf (refer to **Part III, Chapter 7 Cargo Handling Facilities, 2.2 Fundamentals of Performance Verification)**. In this case, ground motion shall be applied in the form of a time-series seismic wave profile. The wind load acting on crane may be determined in accordance with **Part II, Chapter 2, 2.3 Wind Pressure**.

(5) The fender reaction force can be calculated in accordance with **Part II, Chapter 8, 2.2 Actions Caused by Ship Berthing** and **Part II, Chapter 8, 2.3 Actions Caused by Ship Motions** and **9.2 Fender Equipment**.

(6) The tractive force of vessels can be determined in accordance with **Part II, Chapter 8, 2.4 Actions due to Traction by Ships**. In many cases one bollard is installed to one deck block.

(7) When rubber fenders are installed as a damper on an ordinary large wharf with a unit deck block of 20 to 30m in length, a common practice is to provide two rubber fenders on one block. In many cases, fender intervals of 8 to 13m are used. The berthing behavior of various sizes of ships has been examined by installing 1.5-meter-long rubber fenders on an ordinary large wharf. The results of examination has revealed that it is appropriate to calculate the berthing force on the assumption that the ship's berthing energy is absorbed by one fender. Therefore, the reaction force may basically be calculated on the assumption that the berthing energy is absorbed by one fender when using rubber fenders as a damper. However, this does not apply when fenders are installed continuously along the face line of a wharf.

(8) The berthing energy is also absorbed by the displacement of the main structure of the pier. However, it is a common practice not to take this into consideration because in many cases the energy absorbed by the main structure of the pier accounts for less than 10% of the total berthing energy.

(9) **Fig. 5.2.4** shows an example of the displacement-energy curve and the displacement-reaction force curve of a rubber fender. If a single fender absorbs a berthing energy of $E1$, the corresponding fender deformation $\delta 1$ is obtained. Then, using the other curve, the corresponding reaction force acting on the pier is obtained as $H1$($\delta 1 \rightarrow C \rightarrow H1$). However, if fenders are installed too close to each other and the berthing energy is absorbed by two fenders, the berthing energy acting on one fender becomes $E2 = E1/2$ and the corresponding fender deformation becomes $\delta 2$. As can be obtained from the figure ($\delta 2 \rightarrow D \rightarrow H2$), the reaction force acting on the pier in the two fender case is almost the same as that generated in the single fender case because of the characteristics of rubber fender. Thus the horizontal reaction force acting on the pier becomes $2H2 \fallingdotseq 2H1$, which means that the horizontal force to be used in the performance verification becomes twofold. When using fenders that have such characteristics, therefore, it is preferable to give careful consideration to this behavior of reaction force in the performance verification and the determination of the locating of fenders.

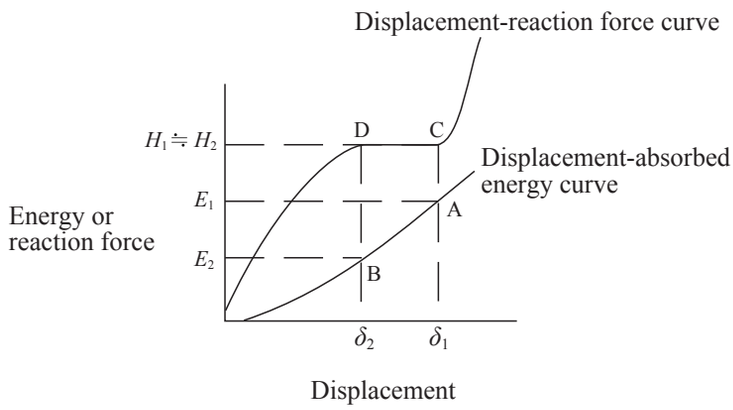

Fig. 5.2.4 Rubber Fender Characteristics Curve

(10) Ground Motion used in Performance Verification of Seismic-resistant

① Ground motion used in performance verification of seismic-resistant is set considering the effect of the surface strata using a ground seismic response analysis. It is necessary to use a seismic response analysis code capable of appropriately evaluating the amplification of ground motions in soft ground (refer to **ANNEX 4, 1 Seismic Response Analysis of Local Soil Deposit**).

② Using a one-dimensional seismic response analysis as described in **ANNEX 4, 1 Seismic Response Analysis of Local Soil Deposit**, the acceleration time history at a position $1/\beta$ below the virtual ground surface is calculated with the acceleration time history of the ground motion set at the seismic bedrock as the input ground motion. When calculating the acceleration time history, the average depth of the $1/\beta$ ground point for each pile may be taken, as shown in **Fig. 5.2.5**. From the acceleration response spectrum obtained in this way, the response accelerations corresponding to the natural periods of the piled pier are calculated, and the value obtained by dividing this by the gravitational acceleration can be regarded as the characteristic value of the seismic coefficient for verification. A damping factor of 0.2 may be used when calculating the acceleration response spectrum. An example of a typical procedure for setting the seismic coefficient for verification is shown in **Fig. 5.2.6**. When verifying the seismic performance of earth-retaining parts using the seismic coefficient method, the structural characteristics are different from those of the piled pier, so the seismic coefficient indicated here may not be used. For the calculation of the seismic coefficient for verification for earth-retaining parts, refer to ⑥ below.

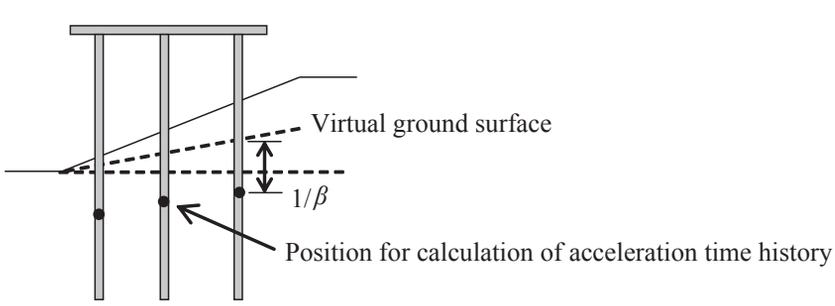

Fig. 5.2.5 Positions for Calculation of Earthquake Ground Motions

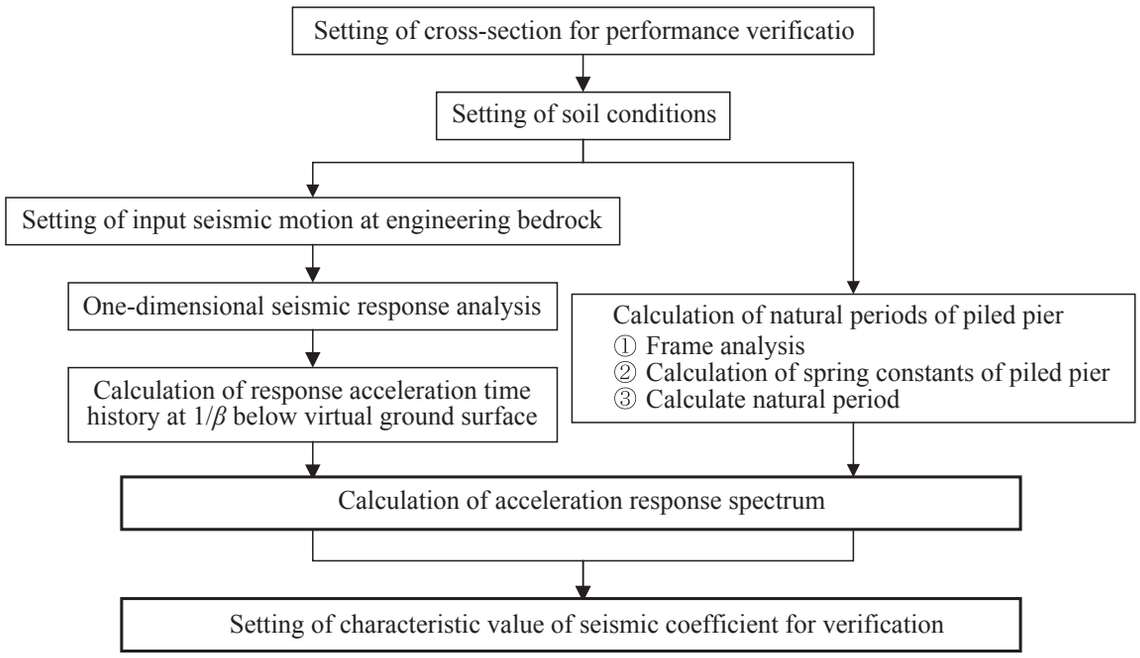

Fig. 5.2.6 Typical Procedure for Setting of Seismic Coefficient for Verification

③ Design value of seismic coefficient for verification

For variable situations under Level 1 earthquake ground motion, the minimum of the design value of seismic coefficient for verification is 0.05, and the maximum is 0.25. However, when the characteristic value of the seismic coefficient for verification exceeds 0.25, this value does not apply, and the characteristic value can be adopted as the design value of seismic coefficient for verification. In summary, the design value of seismic coefficient for verification is as follows.

$$k_{h_d} = \begin{cases} \gamma_{k_h} k_{h_k} & (0.05 \le k_{h_d} \le 0.25) \\ k_{h_k} & (0.25 < k_{h_k}) \end{cases} \tag{5.2.4}$$

where,

k_{hd} : design value of seismic coefficient for verification

k_{hk} : characteristic value of the seismic coefficient for verification

④ The natural periods of the piled pier may be calculated using a frame analysis. If the relationship between the displacement and load is obtained from the frame analysis, as shown in **Fig. 5.2.7**, when minute loads are acting on the piled pier, the spring constants of the piled pier can be set and the natural periods can be obtained from equation **(5.2.5)**. The ground spring constants used in the frame analysis may be calculated using equation **(5.2.2)**.

$$T_s = 2\pi\sqrt{\frac{W}{gK}} \tag{5.2.5}$$

where,

T_s : natural period of piled pier (s)

W : self weight and static load during an earthquake borne by one row of pile group (kN)

g : gravitational acceleration (m/s^2)

K : spring constant of the piled pier (kN/m)

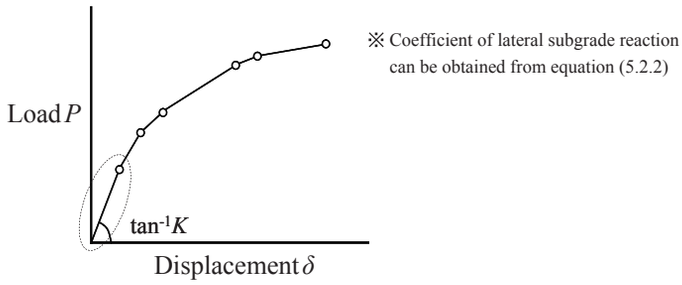

Fig. 5.2.7 Relationship between Load and Displacement from Frame Analysis

⑤ The natural period of the piled pier obtained from the spring constants of the piled pier by frame analysis usually involves some amount of errors. Therefore, if the value in the acceleration response spectrum corresponding to the natural period is a local minimum, the seismic coefficient for verification could be underestimated, and this should not be applied as it is. In addition, as indicated in **5.2.5 Performance Verification of Structural Members**, repeated verification for the variable situation under Level 1 earthquake ground motion is needed. Therefore, it is preferable that the spectral value be determined to calculate the seismic coefficient for verification with a certain range of natural periods. Thus, the number of repetitions of the performance verification may be reduced. However, this does not deny the importance of avoiding a local maximum in the acceleration response spectrum caused by the site effects. In the case that the natural period of the piled pier corresponds to a local maximum in the acceleration response spectrum, it is very likely that the cross-section will not be optimum from the viewpoint of seismic resistance performance and cost. It is necessary to pay attention to this point for setting the cross-section for verification.

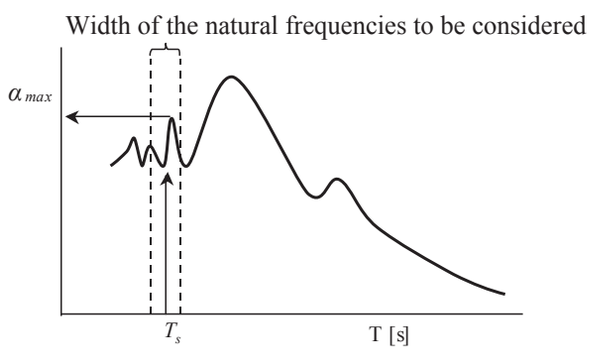

α_{max}: Maximum value of acceleration used to determine the seismic coefficient for verification
T_s: Natural period of the piled pier calculated by frame analysis

Fig. 5.2.8 Consideration of Natural Period in Acceleration Response Spectrum

⑥ Seismic coefficient for verification used in performance verification of seismic-resistant of earth-retaining sections

(a) General

performance verification of seismic-resistant of earth-retaining sections can be carried out by directly evaluating the deformation of the earth-retaining section using a detailed method such as non-linear effective stress analysis. But simple methods such as the seismic coefficient method can be also used. In this case, it is necessary to appropriately set the seismic coefficient for verification used in the performance verification corresponding to the amount of deformation of the facility, considering the effect of the frequency characteristics of the ground motion and the duration. The normal procedure of calculating the seismic coefficient for verification is as shown in **Fig. 5.2.9**. For the calculation of the seismic coefficient for verification of earth-retaining sections of gravity-type, basically refer to **2.2.2 Actions**, prepared for gravity-type quaywalls. However, setting the filter taking into consideration the frequency characteristics as shown by the thick lines is different from gravity-type quaywalls, and this point should be carefully reflected in the analysis.

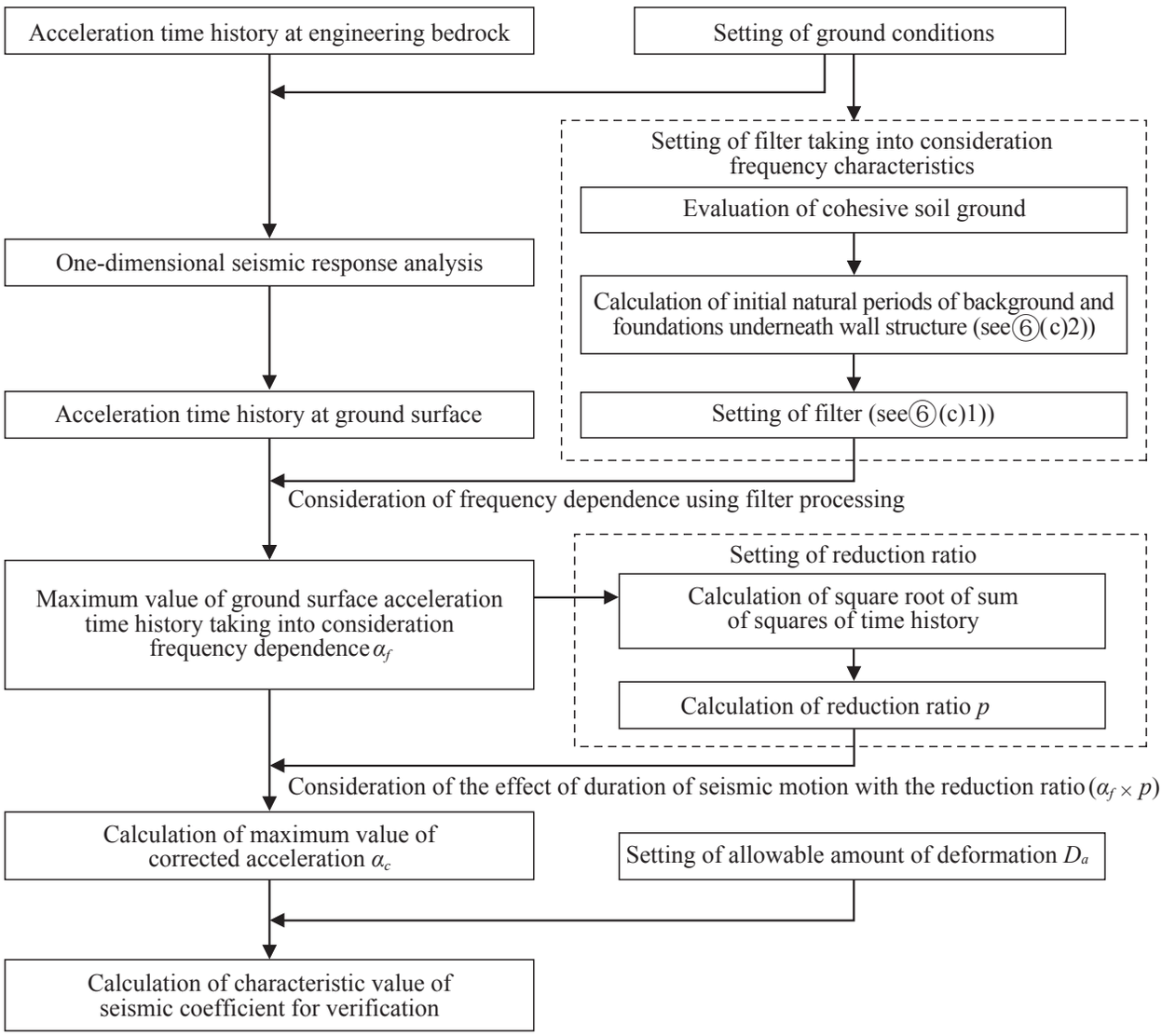

Fig. 5.2.9 Example of Procedure for Calculating Seismic Coefficient for Verification

(b) For the basic flow and points to be noticed in calculating the seismic coefficient for verification of earth-retaining sections of gravity-type structures, **2.2.2, Actions** for gravity-type quaywalls may be referred to. However, it is necessary to consider the effect on the deformation of the earth-retaining section influenced by the slopes at the front of the earth-retaining section and deep rubble mound. And thus setting of the filter considering the frequency characteristics shall be done by the calculation method described below.

(c) Setting of the filter considering the frequency characteristics

1) Setting of the filter
The filter obtained from equation **(2.2.1)** of **2.2.2 Actions** for gravity-type quaywalls may be used as the filter in consideration of the frequency characteristics of the ground motion used in verification of the earth-retaining section of gravity structures. However, as shown in **Fig. 5.2.10**, the height from the virtual ground surface to the top of the earth-retaining section may be substituted for the wall height H. The value of b may be set as the range of values indicated by equation **(5.2.6)** using the height H from the virtual ground surface to the top of the earth-retaining section.

$$0.04H + 0.08 \leq b \leq 0.08H + 0.44 \tag{5.2.6}$$

where,
H : Height from the virtual ground surface to the top of the earth-retaining section (m)

2) Calculation of the natural period of the background soils and soils underneath the wall structure
The method of calculation of the initial natural period T_b of the background soils used in setting the frequency filter that takes into consideration the ground motion of the earth-retaining section of gravity-type structures may be the same as the method for gravity-type quaywalls. Also, the initial natural period T_u of the soils underneath the wall structure may be calculated by evaluating the section from the virtual ground surface including rubble mound down to the seismic bedrock as a ground, and ignoring the ground from the virtual ground surface up to the bottom of the wall structure. In the case of gravity-type quaywalls, the T_u used in setting the filter is evaluated replacing the material properties of the original ground with the material properties of the rubble mound. However, when calculating the T_u of earth-retaining section of gravity-type structures, this may not be applied, so it is necessary to be careful about this. In other words, T_b and T_u should be calculated at the positions shown in **Fig. 5.2.10**.

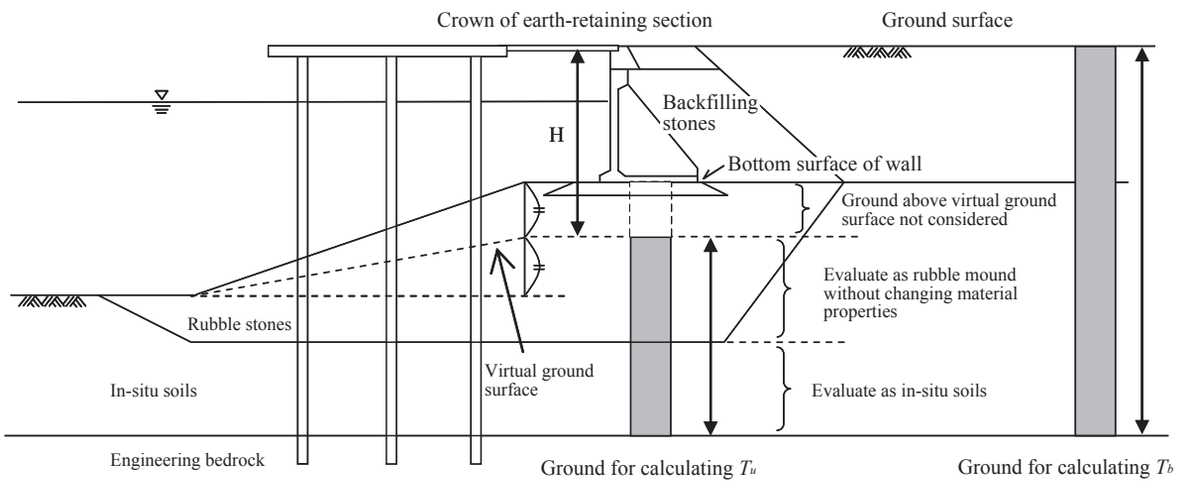

Fig. 5.2.10 Ground Calculation of Natural Periods

5.2.4 Performance Verification

(1) Items to be considered in the performance verification of open-type wharves on vertical piles
In the performance verification of open-type wharves on vertical piles, the necessary items among the following items shall be appropriately investigated and set as necessary.

① The cross-sectional forces in the superstructure (Variable situations: action of ships, Level 1 earthquake ground motion, surcharge and action of waves, accidental situations: Level 2 earthquake ground motion)

② Fatigue failure of the superstructure (Variable situations: repeated actions of surcharge)

③ Stresses in piles (Variable situations: action of ships, Level 1 earthquake ground motion and surcharge, Accidental situation: Level 2 earthquake ground motion)

④ Bearing capacity of piles (Variable situations: action of ships, Level 1 earthquake ground motion, surcharge and action of waves, accidental situations: Level 2 earthquake ground motion)

⑤ Deformation (accidental situations: Level 2 earthquake ground motion)
Performance verification under Level 2 earthquake ground motion shall be in accordance with **(11) Verification of Level 2 Earthquake Ground Motions with a Dynamic Analysis Method**. For the cross-sectional forces in the superstructure and fatigue failure, refer to **5.2.5 Performance Verification of Structural Members**.

(2) In the performance verification of the piled pier section of open-type wharves on vertical piles as described below, no load transmission is considered from the earth-retaining section to the wharves. A piled pier is a very flexible structure if affected by deformation of the ground, hence, piled pier section shall be structurally independent of earth-retaining section. However, in the case where the cross-sectional dimensions are such that it is not possible to eliminate the effect from the earth-retaining section, because of physical restrictions due to ground condition, it is necessary to carry out the verification using a method considering the interaction between the earth-retaining section and the piled pier section.[7)]

(3) In the performance verification for Level 1 earthquake ground motion, the seismic coefficient for verification is calculated from the acceleration response spectrum values corresponding to the natural periods of the piled pier, thus, when the dimensions of the piles are not determined, it is not possible to determine the natural periods of the

piled pier either. Therefore, the dimensions of the piles are assumed, and the seismic coefficient for verification is calculated from the acceleration response spectrum corresponding to the natural periods, then the verification is carried out. If the performance requirements are not satisfied, the pile dimensions are changed, and the same calculation needs to be repeated.

(4) Performance verification of the deformation may be carried out by setting an appropriate limiting value taking into consideration the dynamic deformation of the piled pier. For example, the amount of deformation to ensure that the access bridge does not fall down may be taken as the limiting value. In that case, it is appropriate to use the response displacement considering the dynamic action, such as the displacement response spectrum, and not the displacement considering the static action.

(5) Performance verification for stresses in the piles under design situation for other than accidental situations in respect of Level 2 earthquake ground motion

① Verification of the stresses occurring in the piles of a piled pier may be carried out using equation **(5.2.7)**. In the following equations, the symbol γ is the partial factor corresponding to the suffix, where the suffixes d and k indicate the design value and characteristic value respectively.

(a) When the axial forces are tensile

$$\sigma_{t_d} + \sigma_{bt_d} \le \sigma_{ty_d} \text{ and } -\sigma_{t_d} + \sigma_{bc_d} \le \sigma_{by_d}$$

(b) When the axial forces are compressive

$$\frac{\sigma_{c_d}}{\sigma_{cy_d}} + \frac{\sigma_{bc_d}}{\sigma_{by_d}} \le 1.0 \qquad (5.2.7)$$

where,

σ_t, σ_c : tensile stress due to axial tensile forces acting on the cross-section, and compressive stress due to axial compressive forces, respectively (N/mm²)

σ_{bt}, σ_{bc} : maximum tensile stress and maximum compressive stress due to the flexural moment acting on the cross-section, respectively (N/mm²)

σ_{ty}, σ_{cy} : tensile yield stress and axial compressive yield stress for the weak axis, respectively (N/mm²)

σ_{by} : bending compressive yield stress (N/mm²)

The design values in the equations may be calculated from equation **(5.2.8)**. The values shown in **Table 5.2.2** may be used as the partial factors in the equations.

$$\sigma_{td} = \frac{P_d}{A}, \quad \sigma_{cd} = \frac{P_d}{A}, \quad \sigma_{btd} = \frac{M_d}{Z}, \quad \sigma_{bcd} = \frac{M_d}{Z},$$

$$\sigma_{tyd} = \gamma_{\sigma_y}\sigma_{tyk}, \quad \sigma_{cyd} = \gamma_{\sigma_y}\sigma_{cyk}, \quad \sigma_{byd} = \gamma_{\sigma_y}\sigma_{byk} \qquad (5.2.8)$$

where,

A : cross-sectional area of piles (mm²)

P : axial force on pile (N)

Z : section modulus of piles (mm³)

M : flexural moment of piles (N·mm)

② For the yield stress of piles, refer to **Part II, Chapter 11, 2 Steel**. The axial compressive yield stress may be calculated from the equation in **Table 5.2.1**.

Table 5.2.1 Axial Compressive Yield Stresses (N/mm²)

SKK400 SHK400 SHK400M SKY400	SKK490 SHK490M SKY490
a) When $\frac{\ell}{r} \le 18$ 235	a) When $\frac{\ell}{r} \le 16$ 315
b) When $18 < \frac{\ell}{r} \le 92$ $235 - 1.38\left(\frac{\ell}{r} - 18\right)$	b) When $16 < \frac{\ell}{r} \le 79$ $315 - 2.04\left(\frac{\ell}{r} - 16\right)$
c) When $\frac{\ell}{r} > 92$ $\frac{2.01 \times 10^6}{6.7 \times 10^3 + \left(\frac{\ell}{r}\right)^2}$	c) When $\frac{\ell}{r} > 79$ $\frac{2.04 \times 10^6}{5.0 \times 10^3 + \left(\frac{\ell}{r}\right)^2}$

ℓ: Effective buckling length of member (cm), r: Radius of gyration of member gross cross-section (cm)

③ The design values of cross-sectional forces on the piles can be calculated by multiplying the characteristic values of parameters such as the coefficient of subgrade reaction, the action in the horizontal direction, and other probabilistic variables by the partial factors.

④ It is preferable to calculate the flexural moments on the piles for the direction both normal and parallel to the face line of the wharf. As in the example shown in **Fig. 5.2.1**, if the ground surface under the floor slab of the piled pier has a sloping surface, it is often the case that the flexural moments in the frontmost row of piles are maximized when the ground motion acts in the direction parallel to the face line.

⑤ When it is considered necessary to examine the rotation of the piled pier unit when evaluating the actions, the verification should take this into consideration. In this case the distribution of forces on each pile may be evaluated as described below.

(a) When the symmetry axis of the piled pier unit is perpendicular to the face line of the wharf and the direction of action of the horizontal force is parallel to the symmetry axis as shown in **Fig. 5.2.11**, the horizontal force may be calculated by equation (**5.2.9**).

$$H_i = \frac{K_{H_i}}{\sum_i K_{H_i}} H + \frac{K_{H_i} x_i}{\sum_i K_{H_i} x_i^2} eH \tag{5.2.9}$$

where

H_i : horizontal force on pile (kN)

K_{H_i} : horizontal spring constant of pile (kN/m)

$$K_{H_i} = \frac{12EI_i}{\left(h_i + \frac{1}{\beta_i}\right)^3}$$

h_i : vertical distance between the pile head and the virtual ground surface (m)

β_i : inverse of the distance between the virtual ground surface and the virtual fixed point of pile (m^{-1})

EI_i : flexural rigidity of pile ($kN \cdot m^2$)

H : horizontal force acting on the unit (kN)

e : distance between the block's symmetry axis and the horizontal force (m)

x_i : distance between the unit's symmetry axis and each pile (m)

The subscript i refers to the i-th pile.

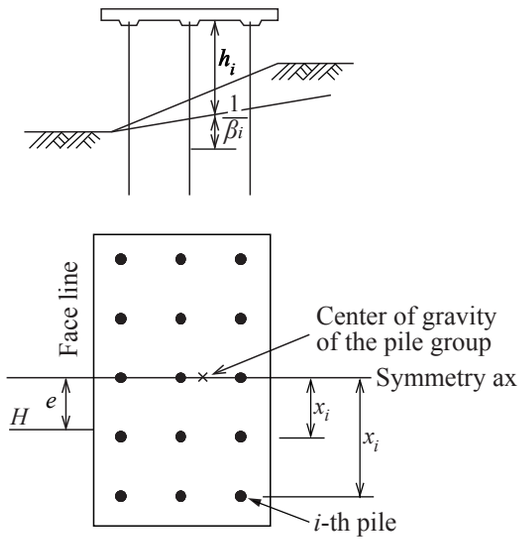

Fig. 5.2.11 Distance between the Center of Gravity of the Pile Group and Individual Piles

(b) The row of piles bearing the maximum total horizontally distributed forces is subject to the verification.

(c) When obtaining K_{H_i}, it is necessary to appropriately set the coefficient of subgrade reaction in the lateral direction of the ground, and calculate β.

⑥ Apart from accidental situations in respect of Level 2 earthquake ground motion, basically the performance is prescribed by yielding of the edge of the pile head. However, the piled pier is characterized with structural robustness, which means the capacity of structure may not be fatally damaged by local failure caused by ground motions, to the extent that the original function of the structure is lost. The reliability index for yielding of the edge of the pile within the ground is reported about 2.0 – 2.7 larger than that of the pile head.[8)]

(6) Performance verification of the bearing capacity in piles under design situations other than accidental situations in respect of Level 2 earthquake ground motion

① Verification of the bearing capacity of piles in piled piers can be carried out appropriately in accordance with **Chapter 2, 2.4.3 Static Maximum Axial Pushing Resistance of Piles Foundations**, and **Chapter 2, 2.4.4 Static Maximum Pulling Resistance of Piles Foundations**, corresponding to the ground characteristics and an analysis method for pile lateral resistance. In this case, for calculating the bearing capacity of piles on a sloping surface, the soil strata below the virtual ground surface can be considered as the effective bearing strata.

② Regarding the virtual ground surface, refer to **5.2.2 Setting the Basic Cross-section**.

(7) Partial factors under the design situations other than accidental situations in respect of Level 2 earthquake ground motion

① Regarding partial factors for stresses occurring in the piles of open-type wharves on vertical piles and partial factors for the bearing capacity of piles, refer to **Table 5.2.2**. The target reliability indices and target failure probabilities for stresses in piles shown in 1) and 4) of **Table 5.2.2** mean the values for edge yielding of the pile head of each single pile in the piled pier. In the table, for the variable situations in respect of the action of ships, the reliability index is 4.1 (failure probability of 2.3×10^{-5}), being based on the average level of safety in the conventional design methods. When the expected total cost represented by the sum of the initial cost and the expected value of the restoration cost due to failure is taken into consideration, the reliability index that minimizes the expected total cost is 3.2 (failure probability of 9.1×10^{-4}) for high earthquake-resistance facilities, and 2.9 (failure probability of 1.9×10^{-3}) for other piled piers.[9)] If here the level of safety is evaluated from reliability theory based on minimization of the expected total cost, the partial factors are as shown in **Table 5.2.2 1)**.[9)] Concerning the variable situations in respect of Level 1 earthquake ground motion shown in the **Table 5.5.2 (4)**, the average level of safety of a piled pier in accordance with the conventional design methods is evaluated and shown. Besides the above, the partial factors of **Table 5.2.2** are defined taking into consideration the settings based on the conventional design methods.

Table 5.2.2 Standard Partial Factors
(1) Variable situations in respect of the action of ships
(ship berthing, traction by ships), Variable situations in respect of surcharge (during operation)
(a) When SKK400 is used

				High earthquake-resistance facility				
Target reliability index β_T				3.2				
Target failure probability P_{fT}				9.1×10^{-4}				
				γ	α	μ/X_k	V	Probability distribution
Pile stress	$\gamma_{\sigma y}$	Steel yield strength		1.00	0.719	1.260	0.08	Normal
	$\gamma_{k_{CH}}$	Coefficient of subgrade reaction		0.60	0.257	1.333	0.76	Log normal
	γ_{P_H}	Horizontal forces		1.35	-0.645	0.870	0.25	Normal
	γ_q	Surcharges		1.00	-	-	-	-
	γ_a	Structural analysis coefficient		1.00	-	-	-	-
				Other than high earthquake-resistance facilities				
Target reliability index β_T				2.9				
Target failure probability P_{fT}				1.9×10^{-3}				
				γ	α	μ/X_k	V	Probability distribution
Pile stress	$\gamma_{\sigma y}$	Steel yield strength		1.00	0.719	1.260	0.08	Normal
	$\gamma_{k_{CH}}$	Coefficient of subgrade reaction		0.60	0.257	1.333	0.76	Log normal
	γ_{P_H}	Horizontal forces		1.30	-0.645	0.870	0.25	Normal
	γ_q	Surcharges		1.00	-	-	-	-
	γ_a	Structural analysis coefficient		1.00	-	-	-	-
				All open-type wharves on vertical piles				
				γ	α	μ/X_k	V	
Bearing capacity	$\gamma_{c'}$	Cohesion		1.00	-	-	-	
	γ_N	N-value		1.00	-	-	-	
	γ_a	Structural analysis coefficient	Pulling piles	0.33	-	-	-	
			Pushing piles	0.40	-	-	-	

※1: α: Sensitivity factor, μ/X_k: Deviation of average value (average value / characteristic value), V: coefficient of variation.
※2:Horizontal forces include fender reaction forces (during ship berthing), tractive forces (during traction), and crane horizontal forces (during operation of the crane).
※3:The design value of axial forces in piles used in the verification of bearing capacity can be obtained from the verification of stresses in piles.

Table 5.2.2 Standard Partial Factors
(1) Variable situations in respect of the action of ships
(ship berthing, traction by ships), Variable situations in respect of surcharge (during operation)
(b) When SKK490 is used

				High earthquake-resistance facility				
Target reliability index β_T				3.2				
Target failure probability P_{fT}				9.1×10^{-4}				
				γ	α	μ/X_k	V	Probability distribution
Pile stress	$\gamma_{\sigma y}$	Steel yield strength		0.95	0.719	1.196	0.08	Normal
	$\gamma_{k_{CH}}$	Coefficient of subgrade reaction		0.60	0.257	1.333	0.76	Log normal
	γ_{P_H}	Horizontal forces		1.35	-0.645	0.870	0.25	Normal
	γ_q	Surcharges		1.00	-	-	-	-
	γ_a	Structural analysis coefficient		1.00	-	-	-	-
				Other than high earthquake-resistance facilities				
Target reliability index β_T				2.9				
Target failure probability P_{fT}				1.9×10^{-3}				
				γ	α	μ/X_k	V	Probability distribution
Pile stress	$\gamma_{\sigma y}$	Steel yield strength		0.95	0.719	1.196	0.08	Normal
	$\gamma_{k_{CH}}$	Coefficient of subgrade reaction		0.60	0.257	1.333	0.76	Log normal
	γ_{P_H}	Horizontal forces		1.30	-0.645	0.870	0.25	Normal
	γ_q	Surcharges		1.00	-	-	-	-
	γ_a	Structural analysis coefficient		1.00	-	-	-	-
				All open-type wharves on vertical piles				
				γ	α	μ/X_k	V	
Bearing capacity	$\gamma_{c'}$	Cohesion		1.00	-	-	-	
	γ_N	N-value		1.00	-	-	-	
	γ_a	Structural analysis coefficient	Pulling piles	0.33	-	-	-	
			Pushing piles	0.40	-	-	-	

※1: α: Sensitivity factor, μ/X_k: Deviation of average value (average value / characteristic value), V: .Coefficient of variation.
※2: Horizontal forces include fender reaction forces (during the ship berthing), tractive forces (during traction), and crane horizontal forces (during operation of the crane).
※3:The design value of axial forces in piles used in verification of bearing capacity can be obtained from the verification of stresses in piles.

(2) Variable situations in respect of surcharges (during strong winds)

				All facilities			
				γ	α	μ/X_k	V
Pile stress	$\gamma_{\sigma y}$	Steel yield strength		1.00	-	-	-
	$\gamma_{k_{CH}}$	Coefficient of subgrade reaction		1.00	-	-	-
	γ_{PH}	Horizontal forces		1.00	-	-	-
	γ_q	Surcharges		1.00	-	-	-
	γ_a	Structural analysis coefficient		1.12	-	-	-
Bearing capacity	$\gamma_{c'}$	Cohesion		1.00	-	-	-
	γ_N	N-value		1.00	-	-	-
	γ_a	Structural analysis coefficient	Pulling piles	0.40	-	-	-
			Pushing: end bearing piles	0.66	-	-	-
			Pushing: friction piles	0.50	-	-	-

※1: α: Sensitivity factor, μ/X_k: Deviation of average value (average value / characteristic value), V: coefficient of variation.
※2:The design value of axial forces in piles used in the verification of bearing capacity can be obtained from the verification of stresses in piles.

Table 5.2.2 Standard Partial Factors

(3) Variable situations in respect of the action of waves

				All facilities			
				γ	α	μ/X_k	V
Bearing capacity	γ_P	Axial forces in piles		1.00	-	-	-
	$\gamma_{c'}$	Cohesion		1.00	-	-	-
	γ_N	N-value		1.00	-	-	-
	γ_a	Structural analysis coefficient	Pulling piles	0.40	-	-	-
			Pushing: end bearing piles	0.66	-	-	-
			Pushing: friction piles	0.50	-	-	-

(4) Variable situations in respect of Level 1 earthquake ground motion

(a) When SKK400 is used

				High earthquake-resistance facility (specially designated)			
Target reliability index β_T				3.65			
Target failure probability P_{fT}				1.3×10^{-4}			
				γ	α	μ/X_k	V	Probability distribution
Pile stress	$\gamma_{\sigma y}$	Steel yield strength		1.00	0.423	1.260	0.08	Normal
	γ_{kCH}	Coefficient of subgrade reaction		0.66	0.194	1.333	0.76	Log normal
	γ_{kh}	Horizontal forces		1.68	-0.885	1.000	0.20	Log normal
	γ_q	Surcharges		1.00	-	-	-	-
	γa	Structural analysis coefficient		1.00	-	-	-	-
				High earthquake-resistance facility (standard)				
Target reliability index β_T				2.67				
Target failure probability P_{fT}				3.8×10^{-3}				
				γ	α	μ/X_k	V	Probability distribution
Pile stress	$\gamma_{\sigma y}$	Steel yield strength		1.00	0.443	1.260	0.08	Normal
	γ_{kCH}	Coefficient of subgrade reaction		0.72	0.215	1.333	0.76	Log normal
	γ_{kh}	Horizontal forces		1.36	-0.870	1.000	0.20	Log normal
	γ_q	Surcharges		1.00	-	-	-	-
	γ_a	Structural analysis coefficient		1.00	-	-	-	-
				Other than high earthquake-resistance facilities				
Target reliability index β_T				2.19				
Target failure probability P_{fT}				1.4×10^{-2}				
				γ	α	μ/X_k	V	Probability distribution
Pile stress	$\gamma_{\sigma y}$	Steel yield strength		1.00	0.455	1.260	0.08	Normal
	γ_{kCH}	Coefficient of subgrade reaction		0.80	0.195	1.333	0.76	Log normal
	γ_{kh}	Horizontal forces		1.23	-0.869	1.000	0.20	Log normal
	γ_q	Surcharges		1.00	-	-	-	-
	γ_a	Structural analysis coefficient		1.00	-	-	-	-
				All open-type wharves on vertical piles				
				γ	α	μ/X_k	V	
Bearing capacity	γ_c'	Cohesion		1.00	-	-	-	
	γ_N	N-value		1.00	-	-	-	
	γ_a	Structural analysis coefficient	Pulling pile	0.40	-	-	-	
			Pushing: end bearing pile	0.66	-	-	-	
			Pushing: friction pile	0.50	-	-	-	

※1: α: Sensitivity factor, μ/X_k: Deviation of average value (average value / characteristic value), V: coefficient of variation.
※2: The design value of axial forces in piles used in the verification of bearing capacity can be obtained from the verification of stresses in piles.

Table 5.2.2 Standard Partial Factors

(4) Variable situations in respect of Level 1 earthquake ground motion
(b) When SKK490 is used

				High earthquake-resistance facility (specially designated)				
Target reliability index β_T				3.65				
Target failure probability P_{fT}				1.3×10^{-4}				
				γ	α	μ/X_k	V	Probability distribution
Pile stress	$\gamma_{\sigma y}$	Steel yield strength		1.00	0.423	1.196	0.08	Normal
	γ_{kCH}	Coefficient of subgrade reaction		0.66	0.194	1.333	0.76	Log normal
	γ_{kh}	Horizontal forces		1.77	-0.885	1.000	0.20	Log normal
	γ_q	Surcharges		1.00	-	-	-	-
	γ_a	Structural analysis coefficient		1.00	-	-	-	-
				High earthquake-resistance facility (standard)				
Target reliability index β_T				2.67				
Target failure probability P_{fT}				3.8×10^{-3}				
				γ	α	μ/X_k	V	Probability distribution
Pile stress	$\gamma_{\sigma y}$	Steel yield strength		1.00	0.443	1.196	0.08	Normal
	γ_{kCH}	Coefficient of subgrade reaction		0.72	0.215	1.333	0.76	Log normal
	γ_{kh}	Horizontal forces		1.43	-0.870	1.000	0.20	Log normal
	γ_q	Surcharges		1.00	-	-	-	-
	γ_a	Structural analysis coefficient		1.00	-	-	-	-
				Other than high earthquake-resistance facilities				
Target reliability index β_T				2.19				
Target failure probability P_{fT}				1.4×10^{-2}				
				γ	α	μ/Xk	V	Probability distribution
Pile stress	$\gamma_{\sigma y}$	Steel yield strength		1.00	0.455	1.196	0.08	Normal
	γ_{kCH}	Coefficient of subgrade reaction		0.80	0.195	1.333	0.76	Log normal
	γ_{kh}	Horizontal forces		1.30	-0.869	1.000	0.20	Log normal
	γ_q	Surcharges		1.00	-	-	-	-
	γ_a	Structural analysis coefficient		1.00	-	-	-	-
				All open-type wharves on vertical piles				
				γ	α	μ/X_k	V	
Bearing capacity	$\gamma_{c'}$	Cohesion		1.00	-	-	-	
	γ_N	N-value		1.00	-	-	-	
	γ_a	Structural analysis coefficient	Pulling pile	0.40	-	-	-	
			Pushing: end bearing pile	0.66	-	-	-	
			Pushing: friction pile	0.50	-	-	-	

※1: α: Sensitivity factor, μ/X_k: Deviation of average value (average value / characteristic value), V: coefficient of variation.
※2: The design value of axial forces in piles used in the verification of bearing capacity can be obtained from the verification of stresses in piles.

(8) Examination of Embedment Length for Lateral Resistance

① The embedment length of each vertical pile may be determined appropriately in accordance with the method of analysis of the pile lateral resistance.

② The embedment lengths of vertical piles are generally set at $3/\beta$ below the virtual ground surface based on the results of pile lateral resistance analyses. The value of β can be set in accordance with **5.2.2 Setting of Basic Cross Section**.

(9) Examination of Pile Joints

① When a pile joint is needed in a pile, it is preferable to ensure that the pile can keep its stability against the impact stress generated in the joint during driving.

② The location of pile joint shall be determined carefully in such a manner as to avoid the portion with excessive stress.

③ For the method for joining piles, refer to **Chapter 2, 2.4.6 [4] Joints of Piles**.

(10) Change of Plate Thickness or Material of Steel Pipe Pile

① Any change on the plate thickness or material along the same steel pipe pile shall be made in accordance with **Chapter 2**,**2.4.6 [5] Change of Plate Thickness or Material Type of Steel Pipe Piles**.

② The strengths of joints and portion with steel thickness change should be examined carefully because there are some examples in which piles of open-type wharves buckled at these portions due to ground deformation in a deep ground where no bending stresses are generated under normal load conditions.

(11) Verification of Level 2 Earthquake Ground Motion with a Dynamic Analysis Method

① For setting the cross-section for the verification, a nonlinear dynamic analysis of a spring-mass model with single mass or double masses if there is a container crane installed may be used. The system consists of a spring equivalent to the modeled load-displacement relationship of the piled pier structure obtained from an elastic-plastic analysis.

② If container cranes or other cargo handling equipment are installed on a piled pier, the seismic response characteristics of the piled pier may be greatly altered depending on the ratio of the mass of the cargo handling equipment to that of the piled pier and the ratio of their natural periods. Therefore, it is necessary to carry out a seismic response analysis that takes into consideration the coupled oscillations of the cargo handling equipment and the piled pier. For details, refer to **Chapter 7 Cargo Handling Facilities**, **2.2 Fundamentals of Performance Verification**.

③ Besides the inertia forces acting on the superstructure of the piled pier, factors that have an adverse effect on the piles include transmission of the deformation of the ground around the earth-retaining section to the superstructure through the access bridge, and transmission of forces to the piles when the soil around the piles moves towards the sea due to the deformation of the soils there. Therefore, a structure of the access bridge should be such that deformation of the soils around the ground earth-retaining section does not adversely affect the superstructure of the piled pier.

(12) Performance Verification for the Stability of the Earth-retaining Section

① The examination of the structural stability of the earth-retaining section of open-type wharf on vertical piles can be made in accordance with the performance criteria prescribed in **2.2 Gravity-type Quaywalls, 2.3 Sheet Pile Quaywalls** depending on its structural type.

② The superstructure and the earth-retaining section of an open-type wharf should be connected by a simply supported slab having clearances on its both ends or buffer material provided on the both ends of slab, in order to prevent the forces acting on the earth-retaining section from being transmitted to the superstructure. It is also preferable to prepare measures against the relatively uneven settlement between the wharf and the earth-retaining section. Furthermore, the clearance between the superstructure and the earth-retaining section should be determined appropriately by considering the dynamic deformation of the superstructure and the earth-retaining section.

③ The stability of the earth-retaining section of open-type wharf on vertical piles against circular slip failure should be examined by applying **Chapter 2, 3.2.1 Stability Analysis by Circular Slip Failure Surface**.

5.2.5 Performance Verification of Structural Members

(1) It shall be well confirmed that there will be no loss of the required function caused by deterioration of the concrete superstructure and the steel pipe pile substructure due to material degradation during the design working life. In particular there have been many cases where the performance requirements of concrete superstructures have not been achieved as a result of salt injury, so a detailed maintenance management plan should be prepared and carried out.

(2) It shall be verified that the flexural moment, axial force, and shear force acting on the connections between the steel pipe piles and the superstructure do not reach the ultimate limit state.

(3) In the performance verification of piled piers, the analysis is carried out by assuming that rigid connections between the pile heads and the concrete beams are formed. Then, it is necessary that the pile head flexural moment can be smoothly distributed to the pile head and the concrete beam. The flexural moment that can be distributed to the beam M_{ud} may be calculated using the following equation, ignoring the reinforcement connection plates or vertical ribs which are provided, as necessary.

$$M_{ud} = \frac{DL^2 f'_{cd}}{6\gamma_b} \tag{5.2.10}$$

where,

M_{ud} : flexural moment that can be distributed to the part of the pile embedded in the beam (N.mm)
D : diameter of steel pipe pile (mm)
L : embedded length of steel pipe pile (mm)
f'_{cd} : design value of compressive strength of beam concrete (N/mm^2)
γ_b : member factor

(4) It is assumed that axial forces are distributed by only the bond between the outer peripheral surface of the piles and the vertical ribs, which are provided, as necessary, and the concrete. In this case, the axial force that can be distributed, P_{ud}, can be calculated from the following equation.

$$P_{ud} = \frac{1}{\gamma_b}\left(L\varphi + 2A_p\right) f_{bo_d} \tag{5.2.11}$$

where,

P_{ud} : axial force that can be distributed to the part of the pile embedded (N)
L : embedded length of steel pipe pile (mm)
φ : outer perimeter of steel pipe pile (mm)
f_{bo_d} : design value of the bond strength between the pile and the concrete (N/mm^2)
$f_{bo_d} = 0.11\, f'^{2/3}_{ck} / \gamma_c$
f'_{ck} : characteristic value of the compressive strength of the concrete (N/mm^2)
γ_c : material coefficient of concrete (= 1.3)
A_p : area of vertical ribs bonding with concrete (mm^2)
γ_b : member factor (may be taken to be 1.0)

(5) It shall be verified that failure due to punching shear forces in the horizontal direction shall not occur in the beam at the end of which the steel pipe pile is embedded. In this case the punching shear resistance, V_{pc_d}, may be calculated from the following equation.

$$V_{pc_d} = 0.2\sqrt{f'_{c_d}}\ \beta_d \beta_p \beta_\gamma\ A_\tau / \gamma_b \tag{5.2.12}$$

where,

V_{pc_d} : design value of punching shear resistance in the horizontal direction (N)
f'_{cd} : design compressive strength of concrete (N/mm^2)
$\beta_d = \sqrt[4]{1/d}$ if β_d>1.5, β_d shall be taken to be 1.5
$\beta_p = \sqrt[3]{100 p_w}$ if β_p>1.5, β_p shall be taken to be 1.5
d : effective height (m)
p_w : ratio of reinforcement to concrete sections
$\beta_\gamma = 1.0$
A_τ : shear resistance area (mm^2)
γ_b : member factor (may be taken to be 1.3)

5.3 Open-type Wharves on Coupled Raking Piles

5.3.1 Fundamentals of Performance Verification

(1) The following may be applied to the open-type wharves with a structure in which the horizontal forces acting on the piled pier are distributed to coupled raking piles.

(2) The performance verification of open-type wharves on coupled raking piles may be carried out in accordance with **5.2.4 Performance Verification** for open-type wharves on vertical piles, as well as the following.

(3) The open-type wharf on coupled raking piles is a structure that resists the horizontal force acting on the wharf such as the seismic actions, fender reaction force, and tractive force of ships with coupled raking piles. Therefore, this type of wharf must be constructed on the ground that yields sufficient bearing capacity for coupled raking piles. Because the coupled raking piles are so laid out to resist the horizontal forces in the direction normal to the face line of the wharf, the horizontal displacement in that direction is smaller than that of open-type wharves on vertical piles. Coupled raking piles are seldom laid out to resist the horizontal forces in the direction of wharf face line. Therefore, it is preferable to examine the strength of the wharf against the horizontal force parallel to the face line in the same manner as the examination for open-type wharves on vertical piles.

(4) In the case of coupled raking piles, the piles come close to adjacent vertical piles and the earth-retaining section, so it is preferable that the layout of the piles be carefully determined considering the construction conditions and the conditions of use.

(5) For the procedure for performance verification of open-type wharves on coupled raking piles, refer to **Fig. 5.3.1** of **5.2.4 Performance Verification** for open-type wharves on vertical piles.

(6) Verification for the variable situations in respect of Level 1 earthquake ground motion may be carried out by obtaining the natural periods of the piled pier with frame analysis and calculating the seismic coefficient for verification with the acceleration response spectrum corresponding to the natural periods.

(7) An example of the cross-section of the open type wharf on coupled raking piles is shown in **Fig. 5.3.1**.

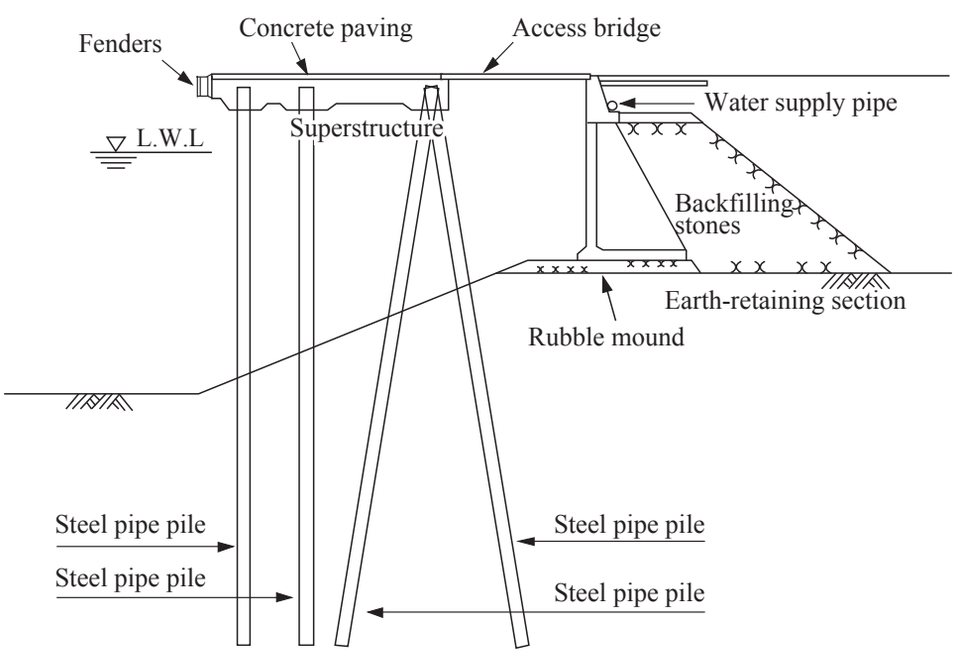

Fig. 5.3.1 Example of Cross-section of Open Type Wharf on Coupled Raking Piles

5.3.2 Setting of Basic Cross-section

(1) For setting the basic cross-section of open-type wharves on coupled raking piles, refer to **5.2.2 Setting of Basic Cross-section**.

(2) A large wharf for design ship size of 10,000 DTW class has one or two sets of coupled raking piles behind one vertical pile in the direction normal to the wharf face line. The distance between piles or between centers of

coupled raking piles is usually set to be 4 to 6 m in consideration of loading conditions and construction work. It is preferable to use a small raking angle of coupled piles from the viewpoint of securing resistance against horizontal force, but in many cases an inclination of 1: 0.33 to 1: 0.2 is used because of constraints related to the required distances from other piles and construction work-related constraints such as the capacity of pile driving equipment available.

5.3.3 Actions

The characteristic value of the seismic coefficient for verification used in performance verification of open-type wharves on coupled raking piles for the variable situations in respect of Level 1 earthquake ground motion shall be appropriately calculated considering the structural characteristics of the wharf. For calculation of the seismic coefficient for verification of open-type wharves on coupled raking piles, refer to **5.2.3(10) Ground Motion used in Performance Verification of Seismic-resistant**.

5.3.4 Performance Verification

(1) Items for the Performance Verification of Open-type Wharves on Coupled Raking Piles
The performance verification of open-type wharves on coupled raking piles shall apply **5.2.4 Performance Verification** and be based on the following.

(2) Performance Verification of Bearing Forces on Piles

① The pushing-in and pulling-out forces of each pair of coupled raking piles shall be calculated appropriately based on the vertical and horizontal forces defined in consideration of the wharf operation conditions.

② The pushing-in and pulling-out forces on each raking pile are obtained with a frame analysis method, taking into consideration the effect of the raking angle of the pile as indicated in **Chapter 2, 2.4.5 Static Maximum Lateral Resistance of Piles**, calculating the ratio of the coefficient of lateral subgrade reaction, and appropriately correcting the coefficient of lateral subgrade reaction.

③ For verification of pushing-in and pulling-out forces in each raking pile, refer to **Chapter 2 2.4.3 Static Maximum Axial Pushing Resistance of Pile Foundations**, and **2.4.4 Static Maximum Pulling Resistance of Pile Foundations**.

(3) Verification of Stresses in Piles
The cross-sectional stress in each pile may be calculated by applying **5.2.4 Performance Verification** for piles subject to axial forces or piles subject to axial forces and flexural moments.

(4) Horizontal Forces Distributed to the Pile Head of each Group when Rotation of the Piled Pier Block is Considered

① When it is necessary to consider rotation of the piled pier block, the horizontal forces distributed to the pile head of each group of piles in an open type wharf on coupled raking piles may be appropriately calculated in accordance with the cross-section of each pile and the raking angle and length of the raking piles. In this case, it may be assumed that all horizontal forces are distributed to the coupled raking piles. Normally the row of piles having the maximum distributed horizontal force among all the rows of piles is adopted as the row of piles used in the verification.

② In the case where the cross-section of each pile group and raking angle of the raking piles are different, the horizontal force distributed to the pile head of each group may be calculated using equation **(5.3.1)** (see **Fig. 5.3.2**).

(a) When the piles can be regarded as fully end bearing piles

$$H_i = \frac{C_i}{\sum_i C_i} H + \frac{C_i x_i}{\sum_i C_i x_i^2} eH \tag{5.3.1}$$

where,

$$C_i = \frac{\sin^2(\theta_{i1} + \theta_{i2})}{\frac{\ell_{i1}}{A_{i1}E_{i1}}\cos^2\theta_{i2} + \frac{\ell_{i2}}{A_{i2}E_{i2}}\cos^2\theta_{i1}} \quad \text{(N/m)}$$

H : horizontal force acting on the block (N/m)
H_i : horizontal force distributed to each pile (N/m)

e : distance between center line of pile group and the acting horizontal force (m)
x_i : distance from each pile group to the center line of a pile group (m)
ℓ_i : total pile length (m), being substituted the pile length of the friction pile when pulling-out forces are acting.
A_i : cross-sectional area of each pile (m^2)
E_i : Young's modulus of each pile (N/m^2)
θ_{i1}, θ_{i2} : angle of each pile with the vertical direction (°)

The subscript i refers to the i_{th} pile.
The subscripts 1, 2 refer to each pile in one pile group.
The center line of a pile group may be obtained from $\Sigma C_i \xi_i / \Sigma C_i$. ξ_i are the coordinates from an arbitrary coordinate origin of each pile group in face line direction.

(b) When the piles can be regarded fully as friction piles

1) Sandy soil
Equation **(5.3.1)** is used, substituting, $\dfrac{2\ell_i + \lambda_i}{3}$ for ℓ_i.

2) Cohesive soil
Equation **(5.3.1)** is used, substituting, $\dfrac{\ell_i + \lambda_i}{2}$ for ℓ_i.

where, λ_i: Pile length of the part over which the peripheral surface resistance force is not effectively working (m), ℓ_i: Total pile length (m).

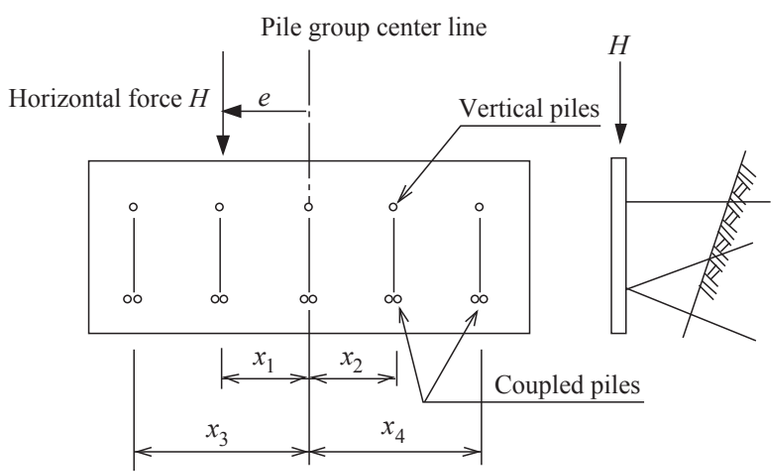

Fig. 5.3.2 Pile group Center Line and Distance from each Pile Group

③ When the cross-section, raking angle and length of the raking piles of each pile group are all equal, the horizontal force distributed to each pile group may be calculated from equation **(5.3.2)**.

$$H_i = \frac{1}{n} H + \frac{x_i}{\sum_i x_i^2} eH \tag{5.3.2}$$

(5) Partial Factors
Verification may be appropriately carried out using partial factors for verification of bearing capacity of piles and stresses in the piles of open-type wharves on coupled raking piles substituted with those for open-type wharves on vertical piles, considering the similarity of performance verification method among these two types of structures.

(6) Analysis in the Face Line Direction
If there are coupled raking piles in the face line direction, the analysis should be carried out using the method defined in **(2)** to **(5)**, in the same way as the direction perpendicular to the face line.

(7) Verification of Pile Embedment
For bearing capacity on raking piles, refer to **5.2.4 Performance Verification**.

(8) Performance Verification of Earth-retaining Sections

① For the performance verification of earth-retaining sections, refer to **5.2.4 Performance Verification**.

② It shall be ensured that the action due to deformation of the earth-retaining section by earthquakes shall not be transmitted to the superstructure of the piled pier via the access bridge, and that the piles are not adversely affected by significant deformation of the soil around the piles towards the sea.

5.4 Strutted Frame Type Pier

(1) Performance verification of strutted frame type piers shall apply **5.2 Open-type Wharves on Vertical Piles**, and **5.3 Open-type Wharves on Coupled Raking Piles**, and also refer to the **Strutted Frame Method Technical Manual**.[22)]

(2) The characteristic value of the seismic coefficient for verification used in the performance verification of strutted frame type piers against the variable situations in respect of Level 1 earthquake ground motion shall be appropriately calculated considering the structural characteristics. For calculation of the seismic coefficient for verification of strutted type piers, refer to **5.2.3(10) Ground Motions used in Performance Verification of Seismic-resistant**.

5.5 Jacket Type Piled Piers

Public Notice

Performance Criteria of Piled Piers

Article 55

1 The provisions of Article 48 shall be applied to the performance criteria of piled piers with modification as necessary.

2 In addition to the requirements of the preceding paragraph, the performance criteria of piled piers shall be as specified in the subsequent items:

(1) The access bridge of a piled pier shall satisfy the following criteria:

(a) It shall have the dimensions required for enabling the safe and smooth loading, unloading, embarkation and disembarkation, and others in consideration of the usage conditions.

(b) It shall not transmit the horizontal loads to the superstructure of the piled pier, and it shall not fall down even when the piled pier and the earth-retaining part are displaced owing to the actions of earthquakes or similar one.

(2) The following criteria shall be satisfied under the variable action situation in which the dominant actions are Level 1 earthquake ground motions, ship berthing and traction by ships, and imposed load:

(a) The risk of impairing the integrity of the members of the superstructure shall be equal to or less than the threshold level.

(b) The risk that the axial forces acting in the piles may exceed the resistance capacity owing to failure of the ground shall be equal to or less than the threshold level.

(c) The risk that the stress in the piles may exceed the yield stress shall be equal to or less than the threshold level.

(3) The following criteria shall be satisfied under the variable action situation in which the dominant action is variable waves:

(a) The risk of losing the stability of the access bridge due to uplift acting on the access bridge shall be equal to or less than the threshold level.

(b) The risk of impairing the integrity of the members of the superstructure shall be equal to or less than the threshold level.

(c) The risk that the axial forces acting in piles may exceed the resistance capacity owing to failure of the ground shall be equal to or less than the threshold level.

(4) In the case of structures having stiffening members, the risk of impairing the integrity of the stiffening members and their connection points under the variable action situation in which the dominant actions are variable waves, Level 1 earthquake ground motions, ship berthing and traction by ships, and imposed load shall be equal to or less than the threshold level.

3 The provisions of Article 49 through Article 52 shall be applied with modification as necessary to the performance criteria of the earth-retaining parts of piled piers in consideration of the structural type.

[Technical Note]

(1) The performance verification of jacket type piled piers or piled piers whose structure has stiffening members shall apply **5.2 Open-type Wharves on Vertical Piles**, and **5.3 Open-type Wharves on Coupled Raking Piles**, and for details refer to the **Jacket Method Technical Manual**.[23)]

(2) The characteristic value of the seismic coefficient for verification used in the performance verification of jacket type piled piers in the variable situations in respect of Level 1 earthquake ground motion shall be appropriately calculated considering the structural characteristics. For calculation of the seismic coefficient for the verification of jacket type piled piers, refer to **5.2.3(10) Ground Motions used in Performance Verification of Seismic-resistant**.

(3) Verification of Level 2 Earthquake Ground Motion with the Dynamic Analysis Method
The performance verification of jacket type piled piers in accidental situations in respect of level 2 earthquake ground motion shall be appropriately carried out considering the concerned circumstances around the facilities,

importance of the facility, and the accuracy of the method. The performance verification of jacket type piled piers may comply with that of open-type wharves on vertical piles, but the actions occurring in the members shall be appropriately set considering the structure of the trusses. The different points in the dynamic characteristics between jacket type piled piers and open-type wharves on vertical piles are as follows.

(a) The natural periods are short due to the nature of truss structure

(b) Because the structure has panel points, the failure mechanisms are complex

(c) Separate verification of the panel points is necessary

5.6 Dolphins

5.6.1 Fundamentals of Performance Verification

(1) The following may be applied to the performance verification of such mooring facilities as pile type, steel cell type, caisson type, and other type dolphin structures. Depending on their function, the types of dolphin include breasting dolphins, mooring dolphins and loading dolphins.

(2) The guidelines outlined in **5.6.2 Actions**, and **5.6.3 Performance Verification** may be used in simple verification methods, thus, this point should be noted when they are adopted.

(3) It is preferable that performance verification of dolphins be carried out considering the following items. For other items, it is preferable to appropriately carry out the performance verification in accordance with each structural form.

① The direction of actions on dolphins is not necessarily a constant direction, hence, the verification should be carried out for several directions, as necessary.

② Conventionally torsion in the case of pile type structures and rotation in the case of caisson type structures have not been examined very much. However, these factors may affect the stability of structures in certain cases, thus, it is necessary to be careful about these aspects.

③ It is preferable to appropriately set the crown height of the dolphin in accordance with its function. In this connection the position of installation of the fenders for breasting dolphins, the level of the deck of the ship for mooring dolphins, and the working range of the loading arm for loading dolphins should be taken into consideration. For connecting bridges, it is preferable that the height be sufficient not to be affected by the action of waves.

(4) An example of the cross-section of a pile type dolphin is shown in **Fig. 5.6.1**.

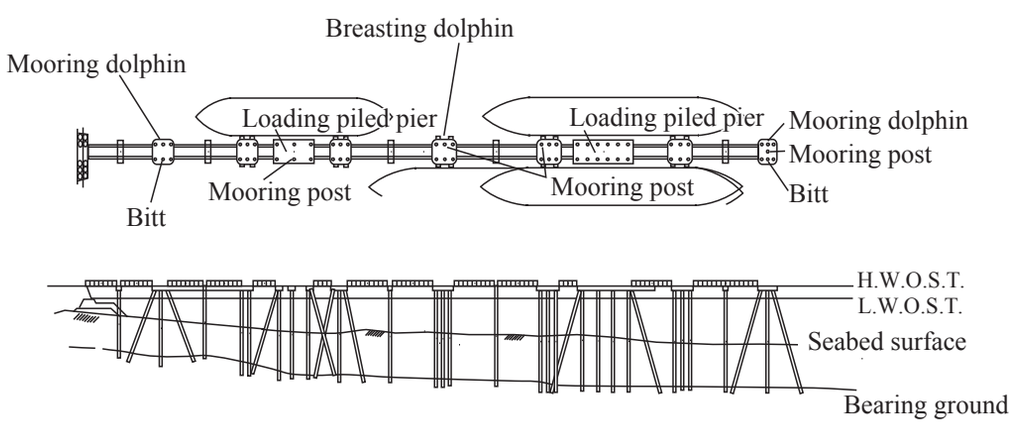

Fig. 5.6.1 Example of Cross-section of Pile Type Dolphin

(5) Layout

① The layout of a dolphin-berth shall be determined appropriately to avoid adverse effects on the navigation and anchorage of other ships in consideration of the dimensions of the design ships, water depth, wind direction, wave direction, and tidal currents.

② In the determination of the layout of breasting dolphins, the following items need to be examined:

(a) Dimensions of the design ship

1) The side of design ships is usually composed of curve lines forming the outlines of the bow and stern parts, each of which accounts for about 1/8 of the length overall (L) of ship, respectively and a straight line forming the outline of the central part which accounts for about 3/4 of the length overall (L) of ship. . It is preferable that the breasting dolphins are installed in such a way that the ships can be berthed to them with the straight line part. Normally the number of breasting dolphins is one each toward the bow and stern, but for dolphins serving for both large and small ships, two each toward bow and stern are sometimes provided.

2) When special cargo handling equipment is required for dolphins in such a case as dolphins for oil handling,

a cargo handling platform is installed midway between the breasting dolphins. In this case, it is preferable to locate the cargo handling platform with its seaside front slightly backward from that of the breasting dolphins, in order that the ship berthing force does not act directly on the cargo handling platform.

(b) It is preferable to layout dolphins in a way that the longitudinal axis of dolphins becomes parallel to the prevailing directions of winds, waves, and tidal currents. This helps to ease ship maneuvering during berthing and unberthing and to reduce external forces acting on the dolphins when the ship is moored.

③ Mooring dolphins are normally set at the positions with the angle of 45º from the rope bitts on ship's bow and stern, having a certain setback from the front face of the breasting dolphins.

④ The distance between breasting dolphins is closely related to the length overall (L) of the design ships. **Fig. 5.6.2** gives the relationship between the breasting dolphin interval and the water depth derived from the past construction data for reference.

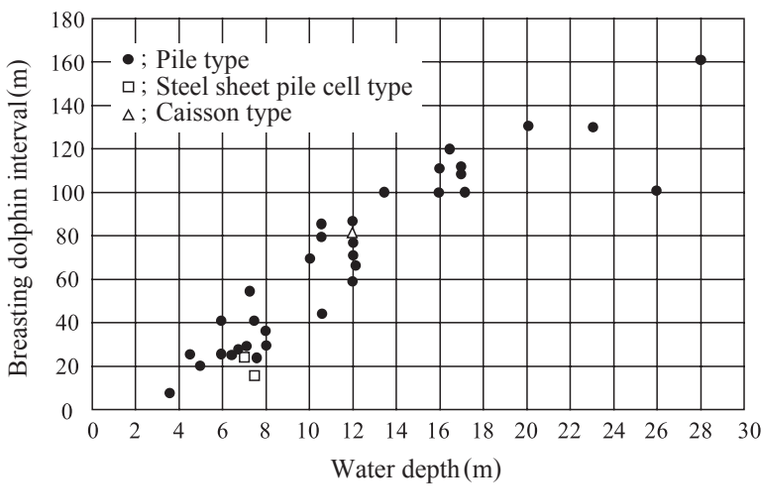

Fig. 5.6.2 Distance between Breasting Dolphins

5.6.2 Actions

(1) For calculation of the reaction force from the fenders onto the dolphins, refer to **Part II, Chapter 8, 2.2 Action Caused by Ship Berthing**, and **Chapter 5, 9.2 Fender Equipment**.

(2) For calculation of the tractive force of ships, refer to **Part II, Chapter 8, 2.4 Action due to Traction by Ships**.

(3) For calculation of vertical loads due to self weight and live load, refer to **Part II, Chapter 10, Self Weight and Surcharge, 5.2.3 Actions**, as applied for open-type wharves on vertical piles.

(4) For the action due to earthquakes, refer to **Part II, Chapter 4, Earthquakes** and **5.2.3 Actions**, as applied for open-type wharves on vertical piles.

(5) For calculation of the dynamic water pressure during an earthquake, refer to **Part II, Chapter 5, 2.2 Dynamic Water Pressure**.

(6) For calculation of wind pressure forces acting on cargo handling equipment, refer to **Part II, Chapter 2, 2.3 Wind Pressure**.

5.6.3 Performance Verification

[1] Pile Type Dolphins

(1) For the performance verification of pile type dolphins, refer to **5.2 Open-type Wharves on Vertical Piles**, and **5.3 Open-type Wharves on Coupled Raking Piles**.

(2) The characteristic value of the seismic coefficient for the verification used in the performance verification of pile type dolphins in variable situations in respect of Level 1 earthquake ground motion shall be appropriately calculated considering the structural characteristics. For calculation of the seismic coefficient for the verification of pile type dolphins, refer to **5.2.3(10) Ground Motions used in Performance Verification of Seismic-resistant**.

(3) In the case of pile type dolphins, the berthing energy may normally be calculated on the assumption that it is absorbed by the deformations of the fenders and the piles.

(4) Large tankers are usually berthed at a slant angle with the dolphin alignment line. As the characteristics of fenders vary depending on the berthing angle, it is recommended in such a case to use the characteristics curve appropriate to the berthing angle. In addition, a slanting berthing entails the risk that some of the fenders attached to a breasting dolphin may not absorb the berthing energy effectively. Therefore, it is preferable to examine carefully which fenders will come in contact with the hull of ship in consideration of the berthing angle.

[2] Steel Cell Type Dolphins

(1) For the performance verification of steel cell type dolphins, refer to **2.9 Cellular-bulkhead Quaywalls with Embedded Sections**.

(2) The characteristic value of the seismic coefficient for the verification for the performance verification of steel cell type dolphins in variable situations in respect of Level 1 earthquake ground motion shall be appropriately calculated considering the structural characteristics. The characteristic value of the seismic coefficient for verification of steel cell type dolphins may be calculated in accordance with gravity-type quaywall by applying **2.2.2(1) Seismic coefficient for verification used for verification of sliding and overturning of wall body and insufficient bearing capacity of foundation grounds in variable situations in respect of level 1 earthquake ground motion** when soil pressure is acting, or composite breakwaters by applying **Chapter 4, 3.1.4(12) Seismic Coefficient for Verification of Sliding, Overturning, and Bearing Capacity of Upright Sections for Level 1 Earthquake Ground Motion,** when soil pressure is not acting.

(3) For the foundations of cargo handling equipment and mooring posts, refer to **Chapter 2, 2.4 Pile Foundations,** and **9.15 Foundations for Cargo Handling Equipment**.

(4) In the case of a cylindrical cell type dolphin, the equivalent wall width can be calculated using equation **(5.6.1)**.

$$B = \sqrt{3}R \tag{5.6.1}$$

where

B : equivalent wall width (m)
R : radius of cylindrical cell (m)

[3] Caisson Type Dolphins

(1) For the performance verification of caisson type dolphins, refer to **2.2 Gravity-type Quaywalls**.

(2) The characteristic value of the seismic coefficient for verification of caisson type dolphins may apply steel cell type dolphins.

(3) Rotation of a caisson occurs when an eccentric external force acts on a dolphin. Examination of stability against rotation must be made even when the stability against sliding and overturning as well as against failure of the foundation ground due to insufficient bearing capacity are found to be satisfactory, because the confirmation of the stability with respect to these items does not guarantee that the caisson is safe against rotation. In this case, in calculating the resistance force, attention should be given to the friction force of the caisson bottom which is proportional to the bottom reaction force as described in **Chapter 2, 1.2 Caissons**.

(3) For the performance verification of structural members, refer to **[1] Pile Type Dolphins**. In addition, for the verification of caisson members, refer to **Chapter 2, 1.2 Caissons**.

5.7 Detached Piers

5.7.1 Fundamentals of Performance Verification

(1) The performance verification of the detached piers may be carried out by appropriately selecting items from **5.2 Open-type Wharves on Vertical Piles**, **5.3 Open-type Wharves on Coupled Raking Piles**, **2.2 Gravity-type Quaywalls,** and **2.9 Cellular-bulkhead Quaywalls with Embedded Sections**, in accordance with the structure type. Also, the performance verification of the earth-retaining part may be carried out by appropriately selecting items from performance criteria of **2.2 Gravity-type Quaywalls, 2.3 Sheet Pile Quaywalls,** and **2.4 Cantilevered Sheet Pile Quaywalls**, and in addition refer to the following.

(2) The following may be applied to the performance verification of the detached piers comprising the detached pier and the earth-retaining section.

(3) An example of the procedure of performance verification of the detached piers is shown in **Fig. 5.7.1**.

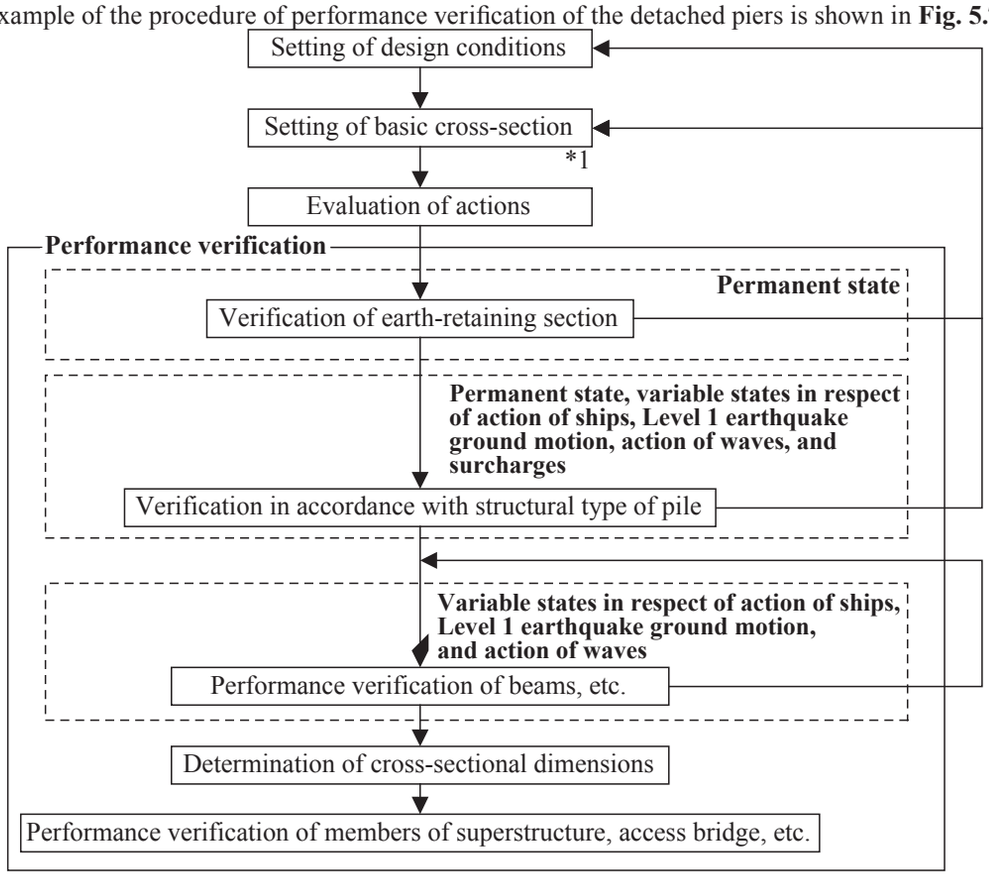

*1: The evaluation of the effect of liquefaction is not indicated, therefore it is necessary to consider this separately.

Fig. 5.7.1 Example of Procedure of Performance Verification of Detached Piers

(4) An example of a cross-section of a detached pier is shown in **Fig. 5.7.2**.

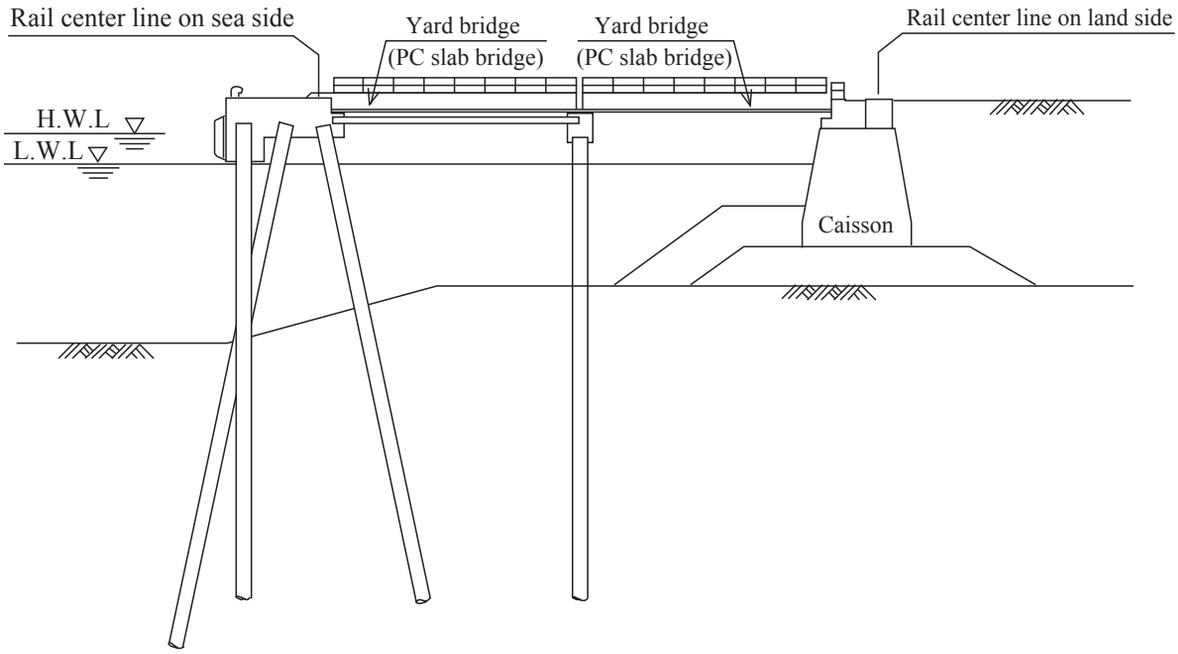

Fig. 5.7.2 Example of Cross-section of Detached Pier

(5) It is necessary to pay adequate attention to the deformation of the earth-retaining section due to the action of earthquakes.

(6) The performance verification of the detached pier shall be conducted so that it is stable against all the actions on the piles and girders. In addition, it is preferable for the detached pier to have a structure with due consideration for the type and dimensions of portal bridge crane, the traveling characteristics, and the settlement of rails after installation.

(7) Rail mounted cranes are installed on detached piers, therefore it is preferable that the structure shall have a small deformation.

5.7.2 Actions

(1) For the wheel loads of cargo handling equipment, refer to **Part II, Chapter 10, 3.2 Live Load**.

(2) For tractive forces of ship, refer to **Part II, Chapter 8, 2.4 Action due to Traction by Ships**.

(3) For the self weight of superstructures, and self weight of piles, refer to **Part II, Chapter 10, 2 Self Weight**, and **Chapter 10, 3 Surcharge**.

(4) For fender reactions, refer to **Part II, Chapter 8, 2.2 Action Caused by Ship Berthing, Part II, Chapter 8, 2.3 Action Caused by Ship Motions**.

(5) For wind loads acting on cargo handling equipment and superstructures, refer to **Part II, Chapter 2, 2.3 Wind Pressure**.

(6) For the ground motions acting on cargo handling equipment, superstructures, and piles, refer to **Part II, Chapter 4, 2 Seismic Action**.

(7) The characteristic value of the seismic coefficient for verification for the performance verification of the detached piers against the variable situations in respect of Level 1 earthquake ground motion shall be appropriately calculated considering the structural characteristics. For calculation of the seismic coefficient for verification of the detached piers, refer to **5.2.3(10) Ground Motion used in Performance Verification of Seismic-resistant**.

(8) For the performance verification of the detached piers, it is preferable to consider wave forces, uplift pressure, and wind loads acting on superstructures, when necessary.

(9) For the performance verification of the beams, braking forces on cargo handling equipment shall be considered as a horizontal force, but for piles shall be considered, as necessary.

(10) For the performance verification of the access bridges and the floor slabs, a live load of 5.0kN/m^2 may be assumed.

5.7.3 Performance Verification

Performance Verification of Girder

① The performance verification of girders shall be conducted so that they are safe against the vertical as well as horizontal forces and loads.

② Structural elements with sufficient strength against the designated vertical and horizontal forces shall be used for the girders of the detached pier, because the crane rails for a crane are directly installed on the girders. In the examination of vertical loads, the increase in the wheel loads due to the wind load or seismic force acting on the bridge crane shall be taken into account.

③ When both legs of the bridge crane are fixed ones, the horizontal load acting on each leg is determined by distributing the total horizontal load to each leg based on the proportion of the wheel load. When the bridge crane has a fixed leg and a suspended leg, the whole horizontal load shall be borne by the fixed leg for making the design on the safer side. At the same time, however, the horizontal force being one-half of the force acting on one fixed leg in the case of the both legs being fixed shall be borne by the suspended leg.

References

1) SUZUKI, A., Koichi KUBO and Yoshio TANAKA: Lateral resistance of vertical piles embedded in sandy layer with sloping surface, Rept. of PHRI VoL5,No.2, 1966
2) Kikuchi, Y., T. Ogura, M. Ishimaru and T. Kondo: Coefficient of lateral subgrade reaction of rubble ground, Proceedings of 53rd Annual Conference of JSCE, 1998
3) YAMASHITA, I.: Equivalent Rigid Frame to Vertical Pile Structure on the Basis of the PHRI Method, Technical Note of PHRI No.105,pp.1-12,1970
4) KUBO, K.: A New Method for the Estimation of Lateral Resistance of Piles, Rept. of PHRI VoL2No.3,pp.1-37,1964
5) YAMASHITA, I. and M. ARATA: The Standard Curves for the Built-in Head Standard Pile Partially Embedded in the C-Type Soil, Technical Note of PHRI No.650pp⌋3-25,1969
6) YAMASHITA, I., T. INATOMI, K. OGURA and Y. OKUYAMA: New Standard Curves in the PHRI Method, Rept. of PHRI Vol. 10 No. 1, pp. 107-168, 1971
7) Nagao, T. and S. Tashiro: Analytical study on earthquake resistant evaluation method for pile-supported wharves, Jour. JSCE No.710,1-60,pp、385-398,2002
8) Nagao, T., Y. Kikuchi, M. Fujita, M. Suzuki and T. Sanuki: Reliability design method of pier type mooring wharf against Level-one earthquake, Proceedings of Structure Engineering, JSCE, Vol. 52A, pp. 201-208, 2006
9) Nagao, t., R. Shibazaki and R. Ozaki: Ordinary Level-one reliability design method of port facilities based on minimum expected total cost considering economic losses, Proceedings of Structural Engineering, JSCE, Vol. 51A, pp. 389-400, 2005
10) Minami, K., K. Takahashi, H. Yokota, T. Sonoyama, N. Kawabata and K. Sekiguchi: Earthquake damage of Kobe Port T Pier and static and dynamic analysis, Soil and Foundation, Vol. 25 No.9, pp. 112-119, 1997
11) Kotsutsumi, O., S. Shiozaki, K. Kazui, S. Iai and H. Mori: Examination of analysis precision improvement of 2-dimensional effective stress analyzing method, Proceeding of Offshore Development, JSCE, Vol. 20, pp. 443-448, 2004
12) FLIP Study Group, Examination of modeling method of pile foundation
13) K, Kitade, Y. Kawamata, K. Ichii and S. Iai: Analysis of laterally loaded pile groups using 2-D FEM, 11th ICSDEE and 3rd ICEGE, Berkeley, CD-ROM, 2004
14) Kotsutsumi, O., Y. Tame, T. Okayoshi, K. Kazui, S. Iai and Y. Umeki: Modeling of interaction of pile and liquefied ground in two-dimensional effective stress analysis, Proceedings of 38th Conference on Geotechnical Engineering,, 2003
15) Kotsutsumi, O., Y. Tame, T. Okayoshi, S. Iai and Y. Umeki: Modeling of interaction of pile and liquefied ground in two-dimensional effective stress analysis, Proceedings of 58th Annual Conference of JSCE, 2003
16) Kawanaka, M., M. Andou, Y. Tame, S. Iai and S. Tagawa: Two-dimensional Finite Element Method analysis of horizontal loading test of a single pile utilizing interaction spring on formation law of soil,- sandy ground-. Proceedings of 58th Annual Conference of JSCE, 2003
17) Yoshikawa, S., D. Kyoku, Y. Tame, Y. Tame, S. Iai and Y. Umeki: Two-dimensional Finite Element Method analysis of horizontal loading test of a single pile utilizing interaction spring on formation law of soil,- Clayey ground-. Proceedings of 58th Annual Conference of JSCE, 2003
18) Kotake, N., Y. Tame, O. Kotsutsumi, S. Iai and S. Tagawa: Two-dimensional Finite Element Method analysis of horizontal loading test of a single pile utilizing interaction spring on formation law of soil,- Influence of ground surface-,. Proceedings of 58th Annual Conference of JSCE, 2003
19) Jyuraku, K., K. Kazui, H. Shinozaki, S. Iai and S. Tagawa: Examination of influence of group piles using pile-ground interaction spring in two-dimensional analysis, Proceedings of 58th Annual Conference of JSCE, 2003
20) Kawamata, Y., K. Kazui, H. Shinozaki, S. Iai and Y. Umeki: Simulation of Stanamic horizontal loading test utilizing two-dimensional analysis incorporated with pile-ground interaction spring, Proceedings of 58th Annual Conference of JSCE, 2003
21) Okayoshi, T., H. Satou, T. Kawabe, S. Shiozaki, S. Iai and Y. Umeki: Stress of ground about piles- Tow-dimensional Finite Element Method analysis of pile foundation utilizing interaction spring dependent on the relationship of strains, Proceedings

of 58th Annual Conference of JSCE, 2003
22) Coastal Development Institute of Technology (CDIT): Technical Manual for Grid Strut Method, 2000
23) Coastal Development Institute of Technology (CDIT): Technical Manual for Jacket structures, 2000
24) Japan Road Association: Specifications and Commentary for Highway Bridges, Maruzen Publications, 2004
25) Japan Road Association: Technical Standards and commentary of elevated pedestrian crossing facilities, 1979

6 Floating Piers

Ministerial Ordinance

Performance Requirements for Floating Piers

Article 30

1 The performance requirements for floating piers shall be as specified in the subsequent items in consideration of its structure type.

(1) The requirements specified by the Minister of Land, Infrastructure, Transport and Tourism shall be satisfied so as to enable the safe and smooth mooring of ships, embarkation and disembarkation of people, and handling of cargo.

(2) The damage due to self weight, variable waves, Level 1 earthquake ground motions, ship berthing and traction by ships, and/or other actions shall not impair the function of the floating pier nor affect its continued use.

2 In addition to the provisions of the preceding paragraph, the performance requirement of the floating piers in the place where there is a risk of having serious impact on human lives, property, and/or socioeconomic activity by the damage to the mooring buoys concerned shall be such that the structural stability of the floating pier is not seriously affected even in cases when the function of the mooring buoys concerned is impaired by tsunamis, accidental waves, and/or other actions.

Public Notice

Performance Criteria of Floating Piers

Article 56

1 The provisions of paragraph 1 of Article 48 (excluding item ii)) shall be applied to the performance criteria of floating piers.

2 In addition to the provisions in the preceding paragraph, the performance criteria of floating piers shall be as specified in the subsequent items in consideration of the structural type:

(1) The floating pier shall have the dimensions required for containment of their movements and tilting within the allowable range in consideration of the usage conditions.

(2) The risk of capsizing of the floating body under the variable action situation in which the dominant action is variable waves shall be equal to or less than the threshold level.

(3) The floating pier shall have the freeboard required for the dimensions of the design ships and the usage conditions.

(4) The following criteria shall be satisfied under the variable action situation in which the dominant actions are Level 1 earthquake ground motions, ship berthing and traction by ships, and imposed load:

(a) The risk of impairing the integrity of the members of the superstructure shall be equal to or less than the threshold level.

(b) The risk of impairing the integrity of the members of the floating mooring facilities and losing the structural stability shall be equal to or less than the threshold level.

3 In addition to the provisions of the preceding two paragraphs, the performance criteria of floating piers for which there is a risk of serious impact on human lives, property, or socioeconomic activity by the damage to the facilities concerned shall be such that the degree of damage under the accidental action situation, in which the dominant actions are tsunamis or accidental waves, is equal to or less than the threshold level.

4 The provisions of Article 64 and Article 91 shall be applied with modification as necessary to the performance criteria of the access facilities of the floating body by taking account of the utilization conditions.

[Commentary]

(1) Performance Criteria of Floating Piers

① Common for floating piers

(a) In setting the cross-sectional dimensions for the performance verification of floating piers, it shall be

appropriately verified that the amount of motions of the floating body and the amount of tilting of the floating body are within the allowable range, in accordance with the envisaged conditions of use, as necessary.

(b) Freeboard (usability)

For the performance criteria of floating piers, the freeboard of the floating pier shall be appropriately set considering the dimensions of the design ships and the envisaged conditions of use to allow safe and efficient embarkation and disembarkation of passengers and safe and efficient handling of cargo.

(c) Structural stability and soundness of members (serviceability)

1) The setting of the performance criteria for the structural stability and soundness of members of floating piers and the design situations excluding accidental situations shall be in accordance with **Attached Table 50**. In the performance verification of floating piers, the performance criteria for variable situation in respect of variable waves, Level 1 earthquake ground motion, berthing and traction by ships, surcharges, for which performance verification is necessary, shall be appropriately set, in accordance with the structure type of the facility. The items within parentheses in the column of "Design situation" in **Attached Table 50** may be applies individually.

Attached Table 50 Setting of Performance Criteria for Structural Stability and Soundness of Structural Members of Floating Piers and Design Situations (excluding accidental situations)

Ministerial Ordinance			Public Notice			Performance requirements	Design situation			Verification item	Index of standard limit value
Article	Paragraph	Item	Article	Paragraph	Item		Situation	Dominating action	Non-dominating action		
30	1	2	56	2	2	Serviceability	Variable	Variable waves	Self weight, wind, water pressure, water flow	Capsizing of floating body	Limit value for capsizing
					4a			(L1 earthquake ground motion)	(Self weight, wind, water pressure, water flow)	Soundness of members of floating body	–
					4b			(Berthing and traction by ships)	(Self weight, support reactions of connecting facilities, wind, water pressure, water flow, surcharges)	Soundness of members of mooring equipment	–
								(Surcharges)	(Self weight, wind, water pressure, water flow)	Structural stability of mooring equipment	–

2) Capsizing of floating bodies

For the performance verification against capsizing of floating bodies, the performance criteria for capsizing shall be appropriately set considering the conditions of use of the floating body and the natural conditions.

3) Soundness of the structural members of a floating body

For the performance verification of the structural members of a floating body, the performance criteria for their soundness shall be appropriately set considering the structural type and material of the members.

4) Soundness of the structural members of mooring equipment

i) For the performance verification of the structural members of mooring equipment, the performance criteria for their soundness shall be appropriately set considering the structural type and material of the members. The setting of the performance criteria for the soundness of structural members of the mooring equipment in the mooring system and the design conditions excluding accidental situations shall be in accordance with **Attached Table 51**. The items within parentheses in the column of "Design situation" in **Attached Table 51** may be applied individually.

Attached Table 51 Setting of Performance Criteria for soundness of Structural Members of Mooring Equipment with Mooring Ropes and Design Conditions (excluding accidental situations)

Ministerial Ordinance			Public Notice			Performance requirements	Design situation			Verification item	Index of standard limit value
Article	Paragraph	Item	Article	Paragraph	Item		Situation	Dominating action	Non-dominating action		
30	1	2	56	2	4b	Serviceability	Variable	Variable waves	Self weight, wind, water pressure, water flow	Yielding of mooring ropes	Design yield stress
								(Berthing and traction by ships)	(Self weight, support reactions of connecting facilities, wind, water pressure, water flow, surcharges)	Stability of mooring anchors, etc.	Resistance force of mooring anchors (horizontal, vertical)

ii) Yielding of the mooring ropes
Verification of yielding of the mooring ropes is to verify that the risk that the design stresses in the mooring ropes will exceed the design yield stresses is equal to or less than the limit value.

iii) Stability of mooring anchors
Verification of the stability of mooring anchors is to verify that the risk that the tractive forces acting in the mooring anchors will exceed the resistance force is equal to or less than the limit value. Mooring anchors is a general term for equipment installed on the bottom of the sea to retain floating bodies, and this includes sinkers.

5) Structural stability of mooring equipment
For the performance verification of the structure of mooring equipment, the performance criteria of its stability shall be appropriately set in accordance with the structure type and materials, of the equipment.

② Floating piers against accidental incident (safety)

(a) The setting of the performance criteria of floating piers against accidental incident and design situations only limited to accidental situations shall be as shown in **Attached Table 52**.

Attached Table 52 Setting of Performance Criteria of Floating Piers against Accidental Incident and Design Situations only limited to Accidental Situations

Ministerial Ordinance			Public Notice			Performance requirements	Design situation			Verification item	Index of standard limit value
Article	Paragraph	Item	Article	Paragraph	Item		Situation	Dominating action	Non-dominating action		
30	2	–	56	3	–	Safety	Accidental	Tsunamis	Self weight, wind, water pressure, water flow	Yielding of mooring ropes	Design yield stress
								accidental waves		Stability of mooring anchors	Resistance force of mooring anchors (horizontal, vertical)

(b) Required function of floating piers against accidental incident
The verification of mooring anchors against accidental situations where the dominating actions are tsunamis and accidental waves shall ensure that floating structures do not drift due to tsunamis and accidental waves resulting in a major effect on its vicinities.

③ Access facilities
The setting of the performance criteria of access facilities of floating piers shall apply the performance criteria for vehicle ramp, which is ancillary equipment of mooring facilities defined in the Standard Public Notice Article 64, and the performance criteria of fixed facilities for embarkation and disembarkation of passengers defined in Article 91, in accordance with the envisaged conditions of use of the floating pier. The access facilities of floating piers are those which function between a floating body and the land or between floating bodies as the passage of passengers or vehicles, such as access bridges, connecting bridges, and adjustment towers.

[Technical Note]

6.1 Fundamentals of Performance Verification

(1) The provisions in this chapter shall be applied to the floating piers with floating bodies (hereinafter referred to as "pontoons") that are moored by mooring chains, etc.

(2) The performance verification methods given in this chapter can be applied to the floating piers installed in places where the actions from waves, tidal currents, and winds are relatively weak.

(3) In setting the cross-sectional dimensions of the floating body of floating piers, it is necessary to appropriately verify that the amount of motion of the floating bodies and the amount of tilting of the floating bodies are controlled within the allowable range in accordance with the envisaged conditions of use.

(4) Freeboard
In the performance verification of the floating piers, it is necessary to appropriately set the freeboard of the floating pier to enable safe and smooth embarkation and disembarkation of passengers, and safe and smooth loading of cargo, considering the dimensions of the design ships and the envisaged conditions of use of the facility.

(5) **Fig. 6.1.1** and **Fig. 6.1.2** show the main components of a floating pier and the structure of a pontoon. A floating pier comprises pontoons, an access bridge that connects the pontoons with land, connecting bridges that interconnect pontoons, mooring chains that moor pontoons, mooring anchors, and other elements.

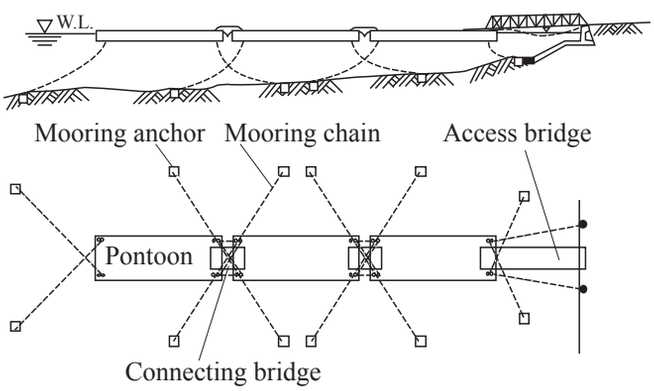

Fig. 6.1.1 Notation of Respective Parts of Floating Pier

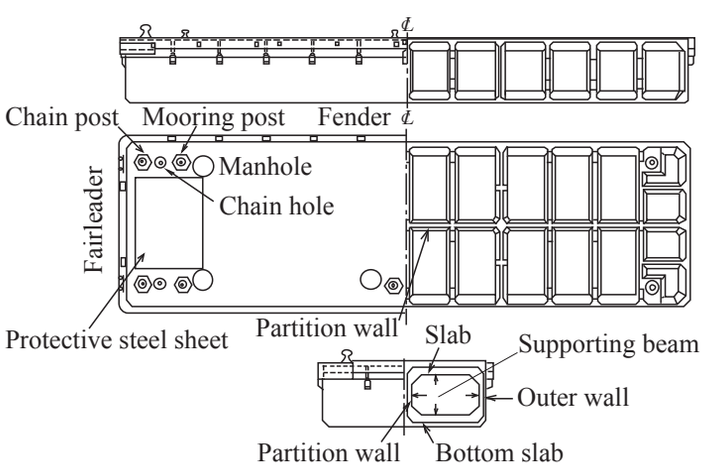

Fig. 6.1.2 Notation of Respective Parts of Pontoon

(6) When the site conditions are outside the coverage of this chapter, **The Technical Manual for Floating Body Structures**[1]" can be referred to. In addition, **Part II, Chapter 2, 4.7.4 Wave Force acting on Structures near the Water Surface**, **Part II**, **Chapter 2, 4.9 Actions on Floating Body and its Motions**, and **Chapter 4, 3.10 Floating Breakwaters** can be used as references as necessary.

(7) Normally, the floating piers are not used in locations where the waves or currents are large, but are frequently used

in locations where the wave height is 1m or less, and the current is 0.5m/s or less.

(8) An example of the procedure of performance verification of floating piers is shown in **Fig. 6.1.3**.

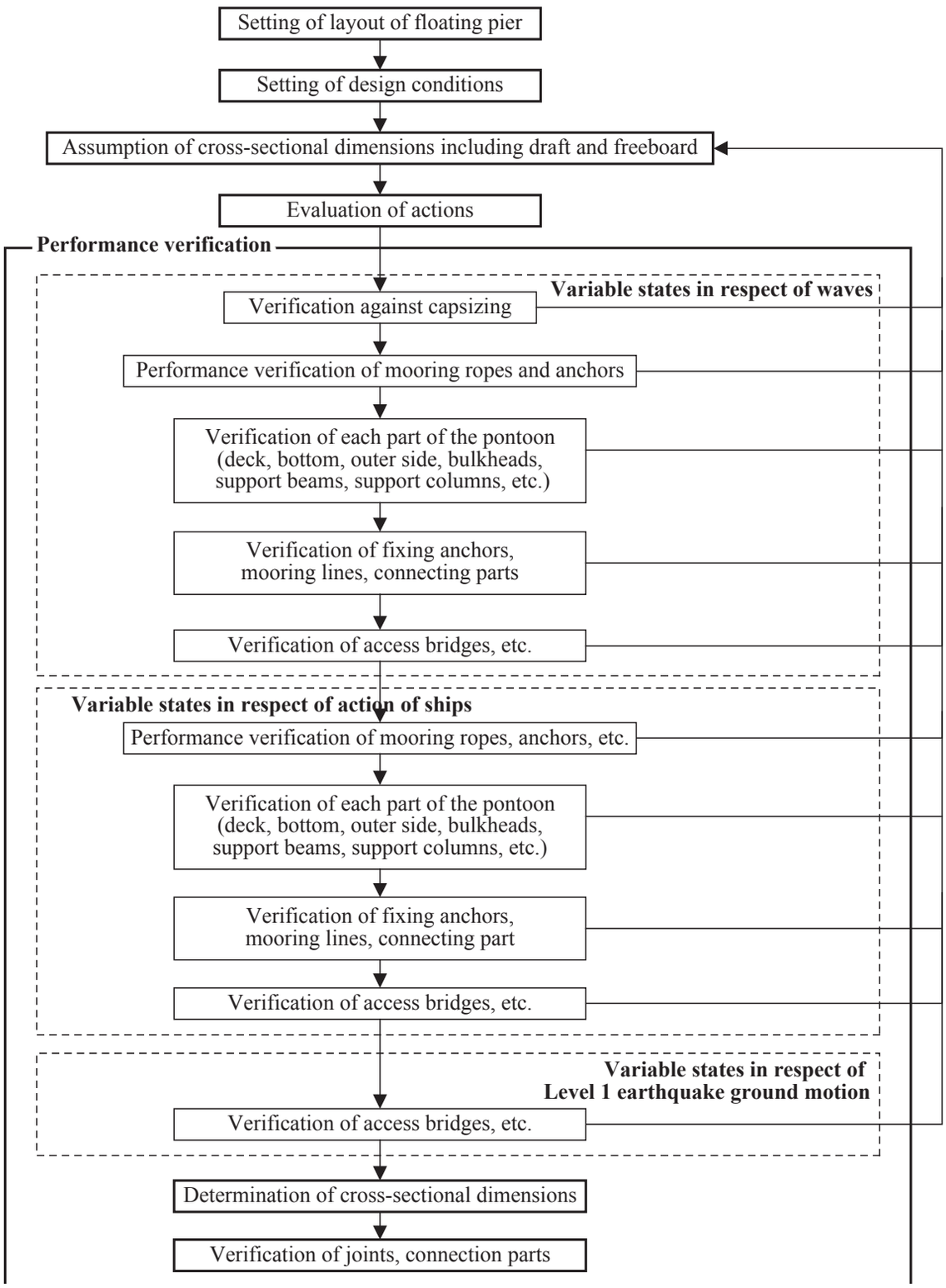

Fig. 6.1.3 Example of Sequence of Performance Verification of Floating Piers

6.2 Setting the Basic Cross-section

(1) A pontoon shall have a surface area and freeboard appropriate for its purpose of utilization. Dimensions of a pontoon shall be appropriate to make it stable against the external actions on it.

(2) The freeboard of a pontoon shall be set to an appropriate height to provide good conditions for cargo handling and passenger use when it is fully loaded and lightly loaded with cargo and passengers. Normally the height is set to about 1.0m. Generally the freeboard may be calculated using equation **(6.2.1)**.

$$h' = d - \frac{W_1}{\gamma_W A} \tag{6.2.1}$$

where,

h' : freeboard (m)
d : pontoon height (m)
W_1 : pontoon weight (kN)
γ_W : unit weight of seawater (kN/m^3)
A : horizontal cross-sectional area of pontoon (m^2)

(3) In the case of a reinforced concrete pontoon, it is preferable that the dimensions are determined considering the imperviousness of the concrete.

(4) Regarding the type of mooring, normally a chain type or a wire type are used for fairly deep water depths, and for shallow water depths, an intermediate wire type, an intermediate buoy type, or a dolphin-fender type are mainly used.[1)] It is preferable that the type of mooring be selected based on a comparison of the function and safety of the floating pier and the characteristics of the mooring facilities.

6.3 Actions

(1) The fender reaction force, wave force and current force need not be considered unless required to do so. However, when there is an anticipated risk that the pontoon may be subjected to wave actions, it is necessary to consider the following forces: the wave forces exerted upon the stationary pontoon that are assumed to be rigidly fixed in position and the fluid forces due to the oscillations of the pontoon [5] (refer to **Part II, Chapter 2, 4.9 Actions on Floating Body and its Motions**). In this case, the mooring force is to be calculated by considering the oscillations of the pontoon.

(2) A live load of 5.0 kN/m^2 for passengers is commonly used for floating piers, which are mainly used for passenger of ships.

(3) The fender reaction forces used in the performance verification of mooring chains may be calculated by reference to **Part II, Chapter 8, 2.2 Actions Caused by Ship Berthing**, and **Part II, Chapter 8, 2.3 Actions Caused by Ship Motions**. Also, for the tractive force of ship, refer to **Part II, Chapter 8, 2.4 Actions Caused by Traction by Ships**.

(4) The wave forces used in the performance verification of mooring chains may be calculated by an appropriate method by reference to **Part II, Chapter 2, 4.7.4 Wave Forces acting on Structures near Water Surface**, **Part II, Chapter 2, 4.9 Actions on Floating Body and its Motions**. The drag coefficient for cubes may be used. The area over which the drag force acts may be taken to be that below the still water surface. The above mentioned wave forces are those that act on a stationary pontoon, but if the natural period of the oscillations of the pontoon is close to the natural period of the waves, resonance may occur, causing a large force in the chain. This point should be carefully considered. In particular, for floating piers located in places where it is envisaged that swells and other long period waves penetrate, it is preferable that an motion analysis of the moored floating bodies be carried out using a numerical simulation method.[7]

6.4 Performance Verification

(1) Items to be considered in the Verification of the Stability of Floating Piers
Normally the following items are examined for the floating piers.
① pontoon stability
② stability of each part of the pontoon
③ stability of the mooring system (mooring chains, mooring anchors)
④ stability of access bridges and connecting bridges

(2) Performance Verification of the Stability of Pontoons

① Structural stability levels required for the pontoons should be secured appropriately in accordance with the conditions of use.

② In the examination of the stability of a pontoon, the following requirements should be satisfied:

(a) The pontoon must satisfy the stability condition of a floating body with the required freeboard against actions of the reaction force from the access bridge supporting point, full surcharge on the deck and even against the presence of some water inside the pontoon owing to leakage of the pontoon.

(b) Even when the full surcharge is placed on only one side of the deck divided by the longitudinal symmetrical axis of the pontoon and the reaction force from an access bridge supporting point acts on this side, if the bridge is attached there, the pontoon must satisfy the stability condition of a floating body and the inclination of the deck should be equal to or less than 1:10 with the smallest freeboard of 0 or more.

③ The height of the water accumulated inside the pontoon by leakage is usually assumed at 10% of the height of pontoon in the examination of pontoon stability. The freeboard to be maintained in this case is mostly about 0.5 m.

④ When being subjected to a uniformly distributed load, the pontoon may be regarded as stable, if equation **(6.4.1)** is satisfied.

$$\frac{I\gamma_W}{W} - \overline{\mathrm{CG}} > 0 \tag{6.4.1}$$

where

I : geometrical moment of inertia of the cross-sectional area at the still water level with respect to the longitudinal axis (m^4)
W : weight of pontoon and uniformly distributed load (kN)
γ_w : unit weight of seawater (kN/m3)
C : center of buoyancy of pontoon
G : center of gravity of pontoon

When the pontoon is partially filled with water by leakage, the pontoon may be regarded as stable when equation **(6.4.2)** is satisfied. The symbols W, I, C, and G of the equation refer to those at the state with water inside.

$$\frac{\gamma_W}{W}\left(I - \sum i\right) - \overline{\mathrm{CG}} > 0 \tag{6.4.2}$$

where

i : geometrical moment of inertia of the water surface inside each chamber with respect to its central axis parallel to the rotation axis of the pontoon (m^4)

When being subjected to an eccentric load, the pontoon may be regarded as stable if the value of $\tan\alpha$ obtained by solving equation **(6.4.3)** satisfies equation **(6.4.4)** (see **Fig. 6.4.1**).

$$\left(W_1 + P\right)\left[\frac{b^2 \tan\alpha}{12d\cos^2\alpha} - \left(\frac{b^2}{24d}\tan^2\alpha + c - \frac{d}{2}\right)\tan\alpha\right] - p\left[a + \left(h - c\right)\tan\alpha\right] = 0 \tag{6.4.3}$$

$$\left.\begin{aligned} &\tan\alpha < \frac{2\left(h-d\right)}{b} \\ &\tan\alpha < \frac{1}{10} \end{aligned}\right\} \tag{6.4.4}$$

where

W_1 : weight of pontoon (kN)
P : total force of eccentric load (kN)
b : width of pontoon (m)
h : height of pontoon (m)
d : draft of pontoon when P is applied to the center of pontoon (m)
c : height of the center of gravity of the pontoon measured from the bottom (m)
a : deviation of P from the center axis of pontoon (m)
α : inclination angle of pontoon (º)

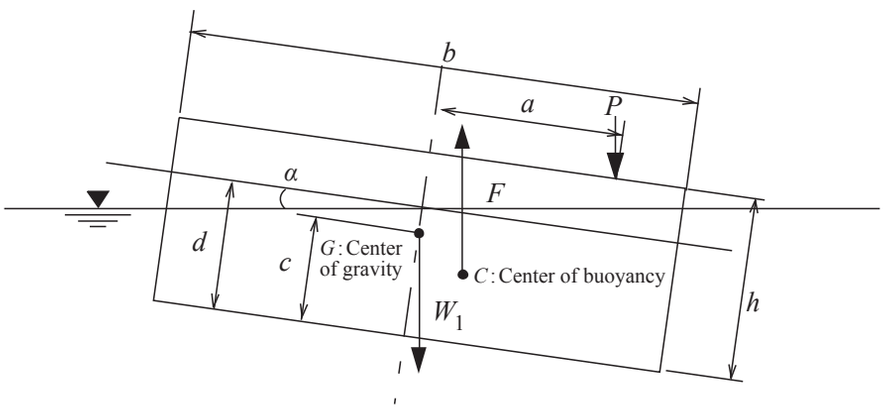

Fig. 6.4.1 Stability of Pontoon subjected to Eccentric Load

(3) Performance Verification of Each Part of a Pontoon

① Stresses generated in the structural parts of the pontoon shall be examined by using an appropriate method selected considering the use conditions of the pontoon, external actions on the respective parts, and their structural characteristics.

② A floor slab can normally be verified for performance as a two-way slab fixed on four sides with supporting beams and side walls against the actions that yield the largest stress out of the following combinations of actions:

(a) When only static load acts on a pontoon
(Static load) + (Self weight)

(b) When live load acts on a pontoon
(live load) + (Self weight)

(c) When the supporting point of an access bridge is set on a pontoon without adjustment tower
(Supporting point reaction force of an access bridge) + (Self weight)

③ A outer wall can normally be verified for performance as a two-way slab fixed on four sides with a floor slab, a bottom slab, and outer walls or supporting beams, against hydrostatic pressure acting when the pontoon submerges by 0.5 m above the deck.

④ A bottom slab can normally be verified for performance as a two-way slab fixed on four sides with outer walls or supporting beams, against hydrostatic pressure acting when the pontoon submerges by 0.5 m above the deck.

⑤ A partition wall can normally be verified for performance as a slab fixed on four sides when one compartment has become fully waterlogged and is exerting hydrostatic pressure .

⑥ The supporting beams of the floor slab, bottom slab and outer walls and the center support can normally be calculated as a rigid frame box under the condition that the maximum action is on the floor slab of the pontoon and the hydrostatic pressure for the draft of the pontoon being equal to its height is applied.

⑦ When the wave actions are to be considered, calculations of section forces are made using Muller's equation, [11] the method of Prestressed Concrete Barge, or Veritus Rule. When it is necessary to consider effects of the oscillations of the floating body, wave parameters, and water depth, the method with cross-sectional division by Ueda et al. [5), 12), 13)] may be used.

(4) Performance Verification of Mooring Chain

① The structure of mooring chains should be examined by using an appropriate method in such a way that the chains can hold securely a pontoon in position under the action of whichever force is the largest among the

fender reaction force generated during berthing, the tractive force of ship and the wave force, with the addition of the tidal current force to each of aforementioned forces.

② Normally, the length of a mooring chain is 5 times the water depth plus the tidal range. When a chain is stretched, it is necessary to pay attention to the following points:
(a) During high tide, the chain should not be over stretched causing an excessive tension force in it.
(b) During high tide there should be no interference with ship berthing.
(c) Sufficient anchor holding power should be ensured for mooring anchors during high tide.
(d) The amount of horizontal movement of the pontoon during low tide should be small.

③ It is said that the anchor holding power of steel mooring anchors is significantly reduced when the angle between the chain at the connection part and the horizontal surface is 3° or higher.

④ The maximum tension acting on each chain is ideally determined through dynamic analysis of the chain and the pontoon, but as this is very difficult, static analysis may be used as the second-best method. A chain can normally be verified for performance on the condition that only one chain is assumed to resist against all the external forces as shown in **Fig. 6.4.2**.

Assuming that the chain forms a catenary line, the maximum tension acting on the chain is given by equation **(6.4.5)**. In the equations below, the symbol γ represents the partial factor of its suffix and suffixes k and d stand for the characteristic value and the design value, respectively.

$$T_d = P_d \sec\theta_2 \tag{6.4.5}$$

The horizontal force acting on the mooring anchor is the same as the horizontal force acting on the pontoon, and the vertical force acting on the anchor is given by equation (**6.4.6**).

$$V_{ad} = P_d \tan\theta_1 \tag{6.4.6}$$

The vertical force acting on the joint between the chain and the pontoon is given by equation (**6.4.7**).

$$V_{bd} = P_d \tan\theta_2 \tag{6.4.7}$$

The angles θ_1 and θ_2 are calculated by equation **(6.4.8)** with an assumed chain length l and an assumed chain weight w per unit length of the chain.

$$\left.\begin{aligned} l &= \frac{P_d}{w}\left(\tan\theta_2 - \tan\theta_1\right) \\ h &= \frac{P_d}{w}\left(\sec\theta_2 - \sec\theta_1\right) \end{aligned}\right\} \tag{6.4.8}$$

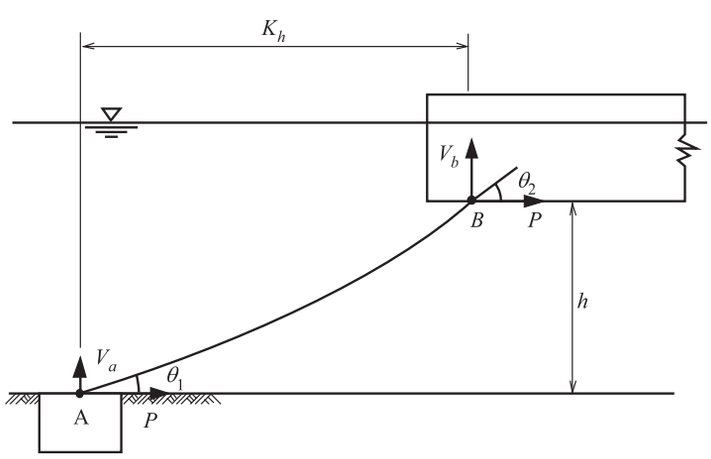

Fig. 6.4.2 Performance Verification of Mooring Chain

The horizontal distance between a mooring anchor and the pontoon when a horizontal force is acting on the pontoon is given by equation (**6.4.9**), and thus the amount of horizontal shift of the pontoon from its stationary position under no horizontal force can be evaluated.

$$K_h = \frac{P_d}{w}\left[\sinh^{-1}\left(\tan\theta_2\right) - \sinh^{-1}\left(\tan\theta_1\right)\right] \tag{6.4.9}$$

Because the catenary line of the chain of normal diameter can be approximately represented with a straight

line, it can be assumed in equations (**6.4.5**) to (**6.4.9**) that $\theta_2 = \theta_1 = \sin^{-1}(h/l)$ and $K_h = \sqrt{l^2 - h^2}$.

where

T : maximum tension acting on the chain (kN)
P : horizontal external force (kN)
V_a : vertical force acting on the mooring anchor (kN)
V_b : vertical force acting on the joint between the chain and pontoon (kN)
θ_1 : angle that the chain makes with the horizontal plane at the joint between the mooring anchor and chain (º)
θ_2 : angle that the chain makes with the horizontal plane at the joint between the mooring chain and pontoon (º)
l : length of the chain (m)
w : weight per unit length of the chain in water (kN/m)
h : water depth under the bottom of pontoon (m)
K_h : horizontal distance between the mooring anchor and the joint between the pontoon and chain (m)

The design values in the equations can be calculated by the following equation. The partial factor can be set at 1.0.

$$P_d = \gamma_P P_k$$

⑤ In the determination of the diameter of the chain, careful consideration should be given to the abrasion, corrosion, and biofouling of chain. In addition, appropriate maintenance work needs to be carried out on the chain, including periodical checks on the chain and its replacement, as necessary.

⑥ When determining the chain diameter with numerical ship motion simulation, the characteristics of displacement -restoration force relationship of the mooring system need to be determined using an appropriate method such as the catenary theory.[14)]

(5) Performance Verification of Mooring Anchor

① A mooring anchor shall be capable of providing the resistance forces required to keep the pontoon stable against the maximum tension acting on the mooring chain and shall have an appropriate stability.

② For the verification of the stability of mooring anchors, equation **(6.4.10)** may be used. In the following, the subscripts *k* and *d* indicate the characteristic values and design values respectively. Also, the structural analysis factor may be taken to be an appropriate value equal to or greater than 1.2.

$$\left.\begin{aligned} R_{hd} &\geq \gamma_a P_d \\ R_{vd} &\geq \gamma_a V_{ad} \end{aligned}\right\} \qquad (6.4.10)$$

where,

R_h : horizontal resistance force of mooring anchor (kN)
R_v : vertical resistance force of mooring anchor (kN)
P : horizontal force acting on mooring anchor (kN)
V_a : vertical force acting on mooring anchor (kN)
γ_a : structural analysis factor

In calculating the design values in the equation, the following equations may be used. Here, V_a, P, and θ_1 in the equations are as shown in **Fig. 6.4.2**. For the characteristic value of the maximum tension force acting in the mooring chain P_k, the value obtained in **(4) Performance Verification of Mooring Chains**, may be used. The value 1.0 may be used for the partial factors.

$$V_{ad} = \gamma_P P_k \tan\theta_1, P_d = \gamma_P P_k, R_{hd} = \gamma_{R_h} R_{hk}, R_{vd} = \gamma_{R_v} R_{vk}$$

③ Normally the following forces are considered as the resistance forces of a mooring anchor, but it is preferable that in-situ stability tests be made for a mooring anchor:

(a) In the case of concrete block:

1) For clay ground:
Horizontal resistance force Rh : Cohesion of the surfaces of bottom and sides, difference between the passive and active earth pressures
Vertical resistance force Rv : Weight in water, effective overburden weight in water

2) For sand ground:

Horizontal resistance force Rh : Bottom friction force, difference between the passive and active earth pressures
Vertical resistance force Rv : Weight in water, effective overburden weight in water
The vertical force employed in the calculation of the bottom friction force is the difference between the weight of the block in water and the vertical component of the chain tension acting on the block.

(b) In the case of steel mooring anchor:
Horizontal resistance force Rh : Holding power
Vertical resistance force Rv : Weight in water

The holding power of a steel mooring anchor is calculated by equation (**6.4.11**).

$$\begin{aligned} &\text{on soft mud:} && T_A = 17\ W_{Ad}^{2/3} \\ &\text{on hard mud:} && T_A = 10\ W_{Ad}^{2/3} \\ &\text{on sand :} && T_A = 3\ W_{Ad} \\ &\text{on flat rock:} && T_A = 0.4\ W_{Ad} \end{aligned} \tag{6.4.11}$$

where
T_A : holding power of the mooring anchor (kN)
W_A : weight of the mooring anchor in water (kN)

The design values in the equations can be calculated from the following equation. Also, the partial factor may be taken to be 1.0.

$$W_{Ad} = \gamma_{W_A} W_{Ak}$$

④ When a rectangular solid anchor block is deeply embedded in a cohesive soil, Hansen obtained equation **(6.4.12)** for the horizontal resistance force by assuming the slip surface around the block.

$$P = 11.4ch \tag{6.4.12}$$

Also, Mackenzie experimentally obtained equation **(6.4.13)** for blocks embedded to a depth of 12 times or more the height of the block.[15)]

$$P = 8.5ch \tag{6.4.13}$$

where,
P : resistance force of the block per unit width (kN/m)
c : cohesion of the cohesive soil (kN/m^2)
h : block height (m)

References

1) Coastal Development Institute of Technology: Technical Manual for floating structure, 1991
2) Yonekawa, M.: Design and calculation examples of port facilities (Enlarged and revised edition)Kazama Publishing, 1983
3) JSCE: Standard Specifications for concrete, 2002
4) Nippon Kaiji Kyokai (NK): Steel barge, 1997
5) UEDA, S., S. SHIRAISHI and K. KAI: Calculation Method of Shear Force and Bending Moment Induced on Pontoon Type Floating Structures in Random Sea, Technical Note of PHRI No.505, 1984
6) Japan Road Association: Specifications and Commentary for Highway Bridges, Part IV Substructures, Maruzen Publications, 2002
7) Ueda, S. : Analysis Method of Ship Motions Moored to Quay Walls and the Applications, Technical Note of PHRI No.504,1984
8) Oogushi, M.: Theoretical naval architect, Kaibun-do Publishing, 2004
9) Japan Road Association: Specifications and Commentary for Highway Bridges, Part II Steel Bridge, Maruzen Publications, 2004
10) Japan Road Association: Specifications and Commentary for Highway Bridges, Part III Concrete Bridge, Maruzen Publications, 2004
11) Jean Muller: Structural Consideration Configurations II, University of California Extension Berkeley, Seminar on Concrete and Vessels Sedt., 1965
12) UEDA, S., S. SHIRAISHI and T. ISHISAKI: Calculation Method of Forces and Moments Induced on Pontoon Type Floating Structures in Waves, Rept. of PHRI Vol. 31 No.2, 1992
13) UEDA, S. S. SHIRAISHI and T. ISHISAKI: Example of Calculation of Forces and Moments Induced on Pontoon Type Floating Structures and Figures and Tables of Radiation Forces, Technical Note of PHRI. No.731,1992

14) UEDA, S and S. SHIRAISHI: Determination of Optimum Mooring Chain and Design Charts Using Catenary Theory, Technical Note of PHRI No.379, 1981
15) Edited by G.A. Leonards: Foundation Engineering, McGrawHill Book Co., p.467, 1962
16) Japan Road Association: Technical Standard and Commentary of grade separation facilities for pedestrians, 1979

7 Shallow Draft Wharves

Ministerial Ordinance

Performance Requirements for Shallow Draft Wharves

Article 31
The provisions of Article 26 or Article 29 shall be applied correspondingly to the performance requirements for shallow draft wharves.

Public Notice

Performance Criteria of Shallow Draft Wharves

Article 57
The provisions of Article 48 through Article 52, or Article 55 shall be applied with modification as necessary to the performance criteria of shallow draft wharves in consideration of the structural type.

[Technical Note]

(1) Performance Requirements

① Common for shallow draft wharves
The performance requirements of shallow draft wharves shall ensure the necessary usability to enable safe and efficient mooring of ships, safe and efficient boarding and embarkation and disembarkation of passengers, and safe and efficient loading and unloading of cargo. In addition, it is necessary that the performance verification shall ensure serviceability in respect of the necessary design situations, from among the permanent situations in respect of self weight and earth pressure, and variable situations in respect of variable waves, Level 1 earthquake ground motion, berthing and traction by ships and surcharges in accordance with the structural type of the facilities.

8 Boat Lift Yards and Landing Facilities for Air Cushion Craft

Ministerial Ordinance

Performance Requirements for Boat Lift Yards

Article 32
The performance requirements for boat lift yards shall be as specified in the subsequent items in consideration of its structure type:

(1) The requirements specified by the Minister of Land, Infrastructure, Transport and Tourism shall be satisfied so as to enable the safe and smooth lifting and launching of boats.

(2) Damage due to self weight, earth pressure, water pressure, variable waves, berthing and traction of boats, Level 1 earthquake ground motions, imposed loads, and/or other actions shall not impair the function of the boat lift yards nor affect their continued use.

Public Notice

Performance Criteria of Boat Lift Yard

Article 58
1 The performance criteria of boat lift yards shall be as specified in the subsequent items:

(1) The boat lift yard shall have the necessary water depth and length corresponding to the dimensions of the design ships.

(2) The boat lift yard shall have the necessary ground elevation in consideration of the tidal range, the dimensions of the design ships, and the usage conditions.

(3) The boat lift yard shall have the necessary ancillary equipment in consideration of the usage conditions.

2 The provisions of Article 49 through Article 52 shall be applied with modification as necessary to the performance criteria of the front wall portion of the boat lift yard in consideration of the structural type.

3 The performance criteria of the pavement of the boat lift yard shall be as specified in the subsequent items:

(1) The pavement of the boat lift yard shall have the dimensions required for enabling the safe and smooth handling of boats.

(2) The risk of impairing the integrity of the pavement under the variable action situation, in which the dominant action is imposed load, shall be equal to or less than the threshold level.

(3) The risk of impairing the integrity of the pavement under the variable action situation, in which the dominant actions are water pressure and variable waves, shall be equal to or less than the threshold level.

[Technical Note]

8.1 Boat Lift Yards

8.1.1 Fundamentals of Performance Verification

(1) A boat lift yard is a facility used to retrieve ships to the land and launch to the sea for such purposes as repair, refuge from storm waves and storm surges, and land storage of ships during winter.

(2) In many cases, rails or cradles are employed in the retrieving and launching of ships of 30 tons or larger in gross tonnage, but the provisions in this section can be applied to the performance verifications of the facilities used to lift and launch ships smaller than 30 tons in gross tonnage directly over the slope of slipway.

(3) **Fig. 8.1.1** Notations of Various Parts of boat lift yard.

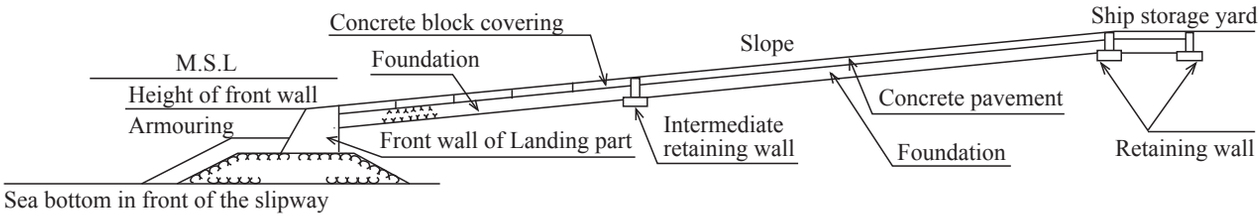

Fig. 8.1.1 Boat Lift Yard

8.1.2 Location Selection of Boat Lift Yard

Location of boat lift yards needs to be determined in such a way that the following requirements are satisfied:

① The front water area is calm.

② The front water area is free from siltation or scouring.

③ Navigation and anchorage of other ships are not hindered.

④ There is an adequate space in the background for the work for ship lifting and launching as well as for ship storage.

8.1.3 Dimensions of Each Part

[1] Requirements for Usability

① Water depth and length

(a) Length
In setting the length of slipways for the performance verification, the dimensions of the design ships shall be appropriately considered.

(b) Water depth
In setting the water depth of slipways for the performance verification of boat lift yards, the dimensions of the design ships and the envisaged conditions of use of the facility shall be appropriately considered.

② Crown height
In setting the crownt height of slipways for the performance verification of boat lift yards, the dimensions of the design ships and the envisaged conditions of use of the facility shall be appropriately considered to enable the slipway to be safely and efficiently used.

③ Slope angle of the slipway
In the performance verification of boat lift yards having slipways, the slope angle of the slipway shall be appropriately set considering the dimensions and shape of the design ships, the ground conditions, the tidal range, and the envisaged conditions of the use of the facility in order to enable smooth retrieving and launching of ships.

[2] Height of Each Part

(1) It is preferable that the crown height of the front wall of the slipway section be located at a level lower than the mean monthly-lowest water level (LWL) by the draft of the design ships. This requirement indicates that it is necessary lift ships even at the low water of neaps. The draft of the ship should be the light draft for the case of repair, refuge, and wintertime storage, and should be the full-load draft for the case of lifting small fishing boats filled with catches. For boat lift yards that are to be constructed in the areas where tidal ranges are small or for the boat lift yards that are to be used even at the low water springs during high waves, it is possible to lower the crest height of the front wall further.

(2) The ground elevation of the ship storage yard can be determined by applying **2.1.1 Dimensions of Quaywalls**. However, when the ship storage area is located adjacent to a quaywall, the crown height of the ship storage area can be set equal to the crown height of the quaywall to facilitate ease of use. In cases where waves are high in the water area in front of the boat lift yard, consideration of the wave runup height is preferable.

(3) It is preferable not to change the gradient of the slipways considering the convenience of retrieving and launching of ships.

(4) If providing a point at which the gradient changes on the slipways is unavoidable, due to the deep depth of water or constraint of available ground area, it is preferable that the position of the point of gradient change be set considering the heights of the following:

① When the slipway consists of two different surfaces
Near M.S.L. - H.W.L.

② When the slipway consists of three different surfaces
First point Near L.W.L.
Second point Near H.W.L.

[3] Front Water Depth

The depth of water in front of the slipway may be determined referring to the sum of the draft of the design ship and a margin of 0.5 m.

[4] Gradient of Slipway

(1) The gradient of slipway shall be determined appropriately in consideration of the shape of the design ships, the characteristics of foundation, and the tidal range, so that the lifting and launching of ships can be performed smoothly.

(2) When the slipway is to be utilized by small ships, it is preferable to have a slope with a single-gradient. Single-gradient slopes are frequently used in slipways for human power-based ship lifting in shallow waters. For this type of slipways, a slope inclination of 1:6 to 1:12 may be used as a reference.

(3) When the water in front of the slipway is deep or the area of the construction site is limited, the slipway may be built with two or more gradients. When this is the case, a two-gradient slipway may be adopted when the crown elevation of the front wall is about-2.0 m, and a three-gradient slipway may be adopted when the crest height of the front wall is lower than-2.0 m. The following values may be used as reference gradients:

① When the slipway consists of two different surfaces:
Front slope: 1:6 to 1:8
Rear slope: 1:8 to 1:12

② When the slipway consists of three different surfaces:
Front slope: an inclination steeper than 1:6
Central slope: 1:6 to 1:8
Rear slope: 1:8 to 1:12

[5] Area of Front Basin

(1) The basin in front of a boat lift yard shall have an appropriate area that allows for efficient operation of ship retrieving and launching without damage to the ships, and safe and efficient navigation of nearby ships.

(2) When the ship is launched to the sea by sliding over the slipway, the ship runs over a certain distance after touching the water with the speed gained during the launch. This distance is more than about five times of the ship's length overall, although it varies depending on the gradient of slope, slipway friction, and launching distance. However, because the ship attains its maneuverability after moving a distance about 4 to 6 times of its length, it is sufficient to secure a distance about five times of the ship's length overall from the waterfront line of the slipway to the other end of the basin. When strong tidal currents exist, it is preferable to add an appropriate margin.

(3) When the ship is launched to the sea gently by wire ropes, a distance of about three times of the ship's length overall will suffice to secure the required width of water area.

8.2 Landing Facilities for Air Cushion Craft

8.2.1 Fundamentals of Performance Verification

(1) Air cushion craft landing facilities shall be located at an appropriate location and have an appropriate structure for the safe boarding of passengers and safe and smooth landing of the craft.

(2) Air cushion craft landing facilities are normally constructed on the shore. These facilities usually use slopes similar to those of slipways as described in **8.1 Boat Lift Yards** to land and glide down air cushion crafts.

(3) **Fig. 8.2.1** illustrates an air cushion craft.

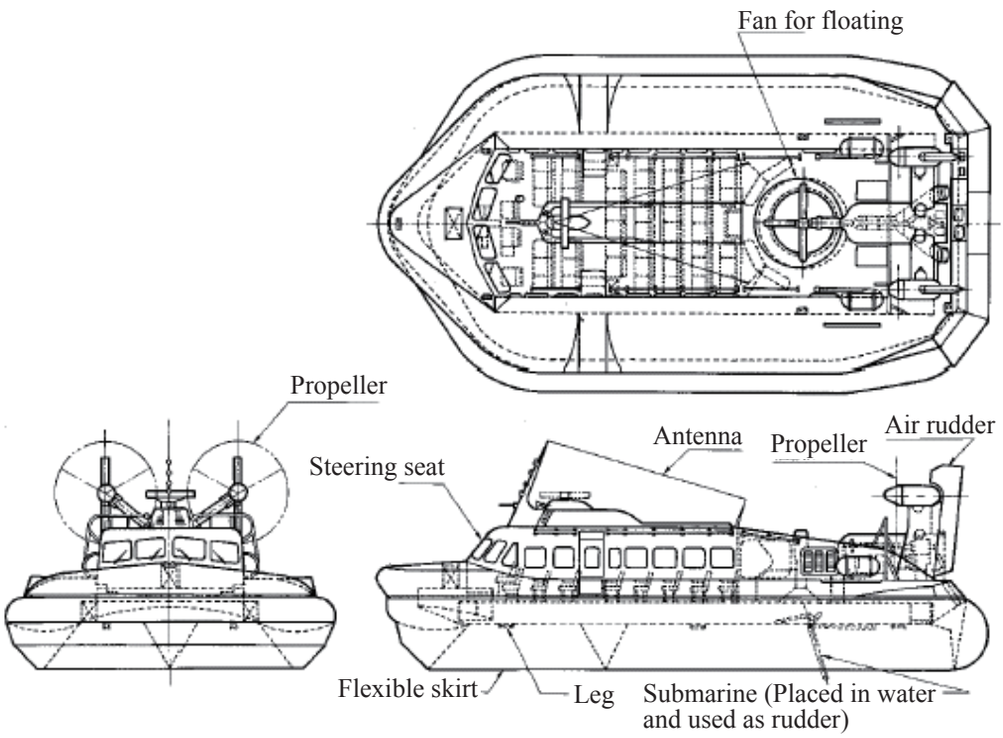

Fig. 8.2.1 Example of Air Cushion Craft

(4) An example of the main dimensions of air cushion craft is shown in **Table 8.2.1**.

Table 8.2.1 Example of Dimensions of Air Cushion Craft

	Total length (m)	Total width (m)	Total height (m)	Skirt depth (m)	Boarding capacity (persons)	Total mass (t)	Maximum speed (kt)
a	18.2	8.6	4.4	1.2	75	14	45
b	24.7	12.7	7.9	1.6	115	50	65
c	23.1	11.0	6.5	1.2	105	51	50
d	14.8	7.0	4.6	1.2	38	9.1	60

8.2.2 Selection of Location

(1) In determining the location, the following requirements shall be considered:
① The water basin in front of the facility shall be calm.
② The effects of strong winds and beam winds on the craft shall be minimum.
③ Operation of the crafts shall not hinder navigation and mooring of other ships.
④ Influences of noise and water spray from the operation of crafts upon other navigation ships and neighboring area shall be minimum.

(2) Air cushion crafts are excellent for stability in high-speed operation, but they are susceptible to influences of winds during low-speed operation such as approaching and leaving to/from a landing facility. In the determination of the location of air cushion craft facilities, therefore, it is preferable to give careful consideration to the level of calmness of the basin in front of the facilities and the direction of the prevailing wind.

(3) As noises from an air cushion craft may be as high as 100 dB at a distance of 50 m from the craft, it is preferable to locate air cushion craft landing facilities far enough away from hospitals, schools and housing areas, or to shut off the noises by surrounding the facilities with sound-proof walls.

8.2.3 Dimensions of Each Part

The air cushion landing facilities shall be provided with a slipway, apron, and passenger boarding facilities. In

addition, lighting facilities, hangers, sound-proof walls, oil supply facilities and repair facilities and others shall be provided as necessary.

[1] Slipway

(1) The structure of the slipway can be determined by referring to the slipway structure described in **8.1.3 Dimensions of Each Part**.

(2) The width of the slipway should be determined considering of the lateral movement of the air cushion craft during the landing or gliding-down operation due to beam winds. Usually a width of about three times the width of the craft is adopted.

(3) The gradient of the slipway needs to be determined considering its psychological effect on passengers, performance of the air cushion craft, and use of land. Usually a gradient of 1:10 or gentler is adopted.

[2] Apron

In many cases the apron width is the same as that of the slipway and the apron length is about two times the length of the air cushion craft. In cases where two or more air cushion crafts use the landing facility simultaneously, a parking space should be provided alongside the apron.

[3] Hangar

When a hangar is to be constructed, it is preferable to locate it adjacent to the apron to facilitate the servicing and maintenance of air cushion craft and to provide the refuge space of air cushion craft in rough weather. The dimensions of the hangar are preferably as follows:

Width: .5 times the width of the air cushion craft (per one craft)
Length: 1.2 times the length of the air cushion craft (per one craft)
Height: There should be a clearance of about 0.5 m from the ceiling to the top of the air cushion craft when the craft is lifted afloat.

References

1) Kimura., K.: Design method of plastering blocks for slipway, Journal of Public Works Research Institute (PWRI), Hokkaido Regional Development Bureau, No. 369、1984

9 Ancillary of Mooring Facilities

Ministerial Ordinance

Performance Requirements for Ancillary Facilities of Mooring Facilities

Article 33

1 The performance requirements for ancillary facilities of mooring facilities shall be as specified in the subsequent items in consideration of the type of facilities:

(1) The requirements specified by the Minister of Land, Infrastructure, Transport and Tourism shall be satisfied so as to facilitate the safe and smooth use of mooring facilities.

(2) The damage due to self weight, earth pressures, Level 1 earthquake ground motions, berthing and traction of ship, imposed loads, collision with vehicles, and/or other damage shall not impair the function of the ancillary facilities nor affect their continued use.

2 In addition to the provisions of the previous paragraph, the performance requirements for the ancillary facilities for mooring facilities which are classified as high earthquake-resistance facilities shall be such that the damage due to Level 2 earthquake ground motions and other actions do not affect the restoration through minor repair works of the functions required of the piers concerned in the aftermath of the occurrence of Level 2 earthquake ground motions. Provided, however, that as for the performance requirements for the ancillary facilities of the mooring facilities which require further improvement in earthquake-resistant performance due to the environmental conditions, social or other conditions to which the pier concerned is subjected, the damage due to said actions shall not adversely affect the restoration through minor repair works of the functions of the facilities concerned and their continued use.

9.1 Mooring Posts and Mooring Rings

Public Notice

Performance Criteria of Mooring Posts and Mooring Rings

Article 59

The performance criteria of mooring posts and mooring rings shall be as specified in the subsequent items:

(1) Mooring posts and mooring rings shall be appropriately placed so as to enable the safe and smooth mooring of ships and cargo handling works by taking into account the positions of the mooring lines for the ships using the mooring facilities concerned.

(2) The risk of impairing the integrity of the members of mooring posts and mooring rings and losing their structural safety shall be equal to or less than the threshold level under the variable action situation in which the dominant action is the traction by ships.

[Commentary]

(1) Performance Criteria of Mooring Posts and Mooring Rings

① Stability of Facilities (serviceability)

(a) **Attached Table 54** shows the setting on the performance criteria and design situations, except accidental situations, of mooring posts and mooring rings.

Attached Table 54 Setting on the Performance Criteria and Design Situations (excluding accidental situations) of Mooring Posts and Mooring Rings

Ministerial Ordinance			Public Notice			Performance requirements	Design situation			Verification item	Index of standard limit value
Article	Paragraph	Item	Article	Paragraph	Item		Situation	Dominating actions	Non-dominating actions		
33	1	2	59	1	2	Serviceability	Variable	Traction by ships		Soundness of mooring post and mooring ring components	–
								Traction by ships	Self weight	Stability of mooring post and mooring ring structures (sliding of superstructures)	Limit value on sliding
										Stability of mooring post and mooring ring structures (overturning of superstructures)	Limit value on overturning

(b) Soundness of Structural Members (serviceability)
For the performance verification of mooring posts and mooring rings, the performance criteria for the soundness shall be set properly according to the kind of materials.

(c) Stability of Structures (serviceability)
The verification of structural stability shall verify the sliding and overturning of superstructures under the variable situations where dominating action is the traction by ships

[Technical Note]

9.1.1 Position of Mooring Posts and Mooring Rings

(1) The performance verification of mooring posts and mooring rings shall require their proper layout to allow the safe and smooth mooring of ships and cargo handling, considering the positions of the mooring lines of the ships using the mooring facilities concerned.

(2) In general, mooring posts are installed at around both ends of the berth and away from waterlines as far as possible for the mooring of ships in a storm, whereas bollards are installed close to the berth faceline for the mooring or the berthing and leaving of ships in ordinary conditions.

(3) The positioning and names of the mooring lines of ships during berthing may refer to **2.1.1 (2) Length, Water Depth and Layout of Berths.**

(4) The distance intervals between bollards and their minimum number of installation per berth may refer to the values given in **Table 9.1.1**.

Table 9.1.1 Placement of Bollards

Gross tonnage of design ship (t)	Maximum interval between bollards (m)	Minimum number of installation per berth (unit)
Less than 2,000	10-15	4
2,000 or more and less than 5,000	20	6
5,000 or more and less than 20,000	25	6
20,000 or more and less than 50,000	35	8
50,000 or more and less than 100,000	45	8

(5) In the cases where mooring lines are not pulled upward at such mooring facilities for small ships mooring posts at intervals of 10 - 20 m are installed without bollards. Instead of bollards, small ship mooring facilities may be installed with mooring rings or similar with equivalent strengths to bollards at intervals of 5 - 10 m.

(6) For some small ship mooring facilities, mooring rings or equivalents may be installed to moor small ships. Mooring rings or similar shall be installed at a proper height taking tide levels into consideration. Small ships are

often tied to mooring rings with the mooring lines from their bows and sterns, and hence mooring rings or similar may be placed at intervals of 5 - 10 m.

(7) Mooring posts are installed according to use conditions by ships. They are often installed in such manner that angles between ship axes and mooring lines would be set closely to a right angle as much as possible so that they could react effectively against the forces perpendicular to the ship axes. In many cases, one mooring post is installed at each end of a berth.

The angles of bow lines and stern lines with respect to their ship axes are set to be small to control the movement of ships in the ship axes direction. It is preferable to install bollards so that these angels are kept larger than 25 - 30°. **Fig. 9.1.1** shows the typical installment examples of mooring posts.

(8) There are cases where the mooring lines stretched from two adjacently moored ships are tied to one mooring post installed at the junction of two berths. Since the lines are stretched from different directions and their resultant force is not larger than the tractive force from either of the ships, there is no need to install larger-size mooring posts at the junctions of two berths. However, in some cases, it would take time to release mooring lines for unberthing, resulting in accidents. Two bollards shall be hence installed at an interval of several meters in the junction. In the case of large mooring facilities, sometimes four or more lines are tied from each of bow and stern of the both sides of ships. In such a case, it is preferable to install two bollards at an interval of several meters at the places to tie these lines.

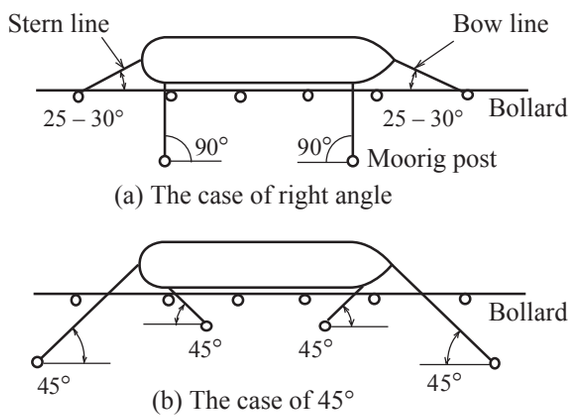

Fig. 9.1.1 Typical Arrangements of Mooring Posts and Bollards

9.1.2 Actions

(1) Tractive Force of Design Ship

① The tractive forces by ships shall be calculated appropriately considering the berthing and mooring conditions of ships.

② The tractive forces by ships can be calculated in accordance with **Part II, Section 8, 2.4 Actions due to Traction by Ships**.

(2) The verification of the sliding and overturning of superstructures shall be performed on tractive forces from the most dangerous traction angles. The traction angles of the most dangerous tractive forces can be calculated from equations **(9.1.1)** and **(9.1.2)**. The expected ranges of traction angles depending on conditions such as the dimensions of design ships and tide levels shall be considered.

① The case of sliding (See **Fig. 9.1.2 (a)**)

$$\theta_k = 2\tan^{-1}\left\{\frac{1}{(T-P_h)}\left(W + P_v - \sqrt{W^2 + 2WP_v + P_v^2 - T^2 + P_h^2}\right)\right\} \tag{9.1.1}$$

where

θ : traction angle (rad)
T : tractive force (kN/m)
P_v : resultant vertical earth pressure acting on superstructure (kN/m)
P_h : resultant horizontal earth pressure action on superstructure (kN/m)
W : weight of superstructure (kN/m)

② The case of overturning (See **Fig. 9.1.2 (b)**)

$$\theta_k = \tan^{-1}\left(\frac{x_2}{h_1}\right) \tag{9.1.2}$$

where

θ : traction angle (rad)
x_2 : distance from faceline of quaywall to tractive force acting point (m)
h_1 : distance from bottom of superstructure to tractive force acting point (m)

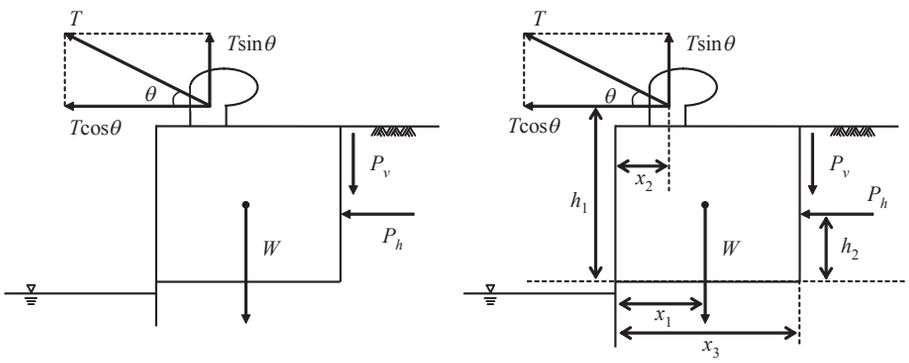

(a) Sliding (b) Overturing

Fig. 9.1.2 Actions caused by Tractive Forces

9.1.3 Performance Verification

(1) Examination on the Stability of the Superstructures on which Mooring Posts and Mooring Rings are Installed

① Examination on sliding
The following equation may be used for examining the stability of the superstructures on which mooring posts and mooring rings are installed. The subscript *d* indicates design value.

$$f_d(W_d + P_{v_d} - T_d \sin\theta_d) \geq \gamma_a(T_d \cos\theta_d + P_{h_d}) \tag{9.1.3}$$

where

f : friction coefficient
W : weight of superstructure (kN/m)
θ : traction angle (rad) (see **9.1.2 Actions**)
T : tractive force (kN/m)
P_v : resultant vertical earth pressure acting on superstructure (kN/m)
P_h : resultant horizontal earth pressure acting on superstructure (kN/m)
γ_a : structural analysis factor

The design values in the equation can be calculated from the following equation, where the symbol γ is the partial factor corresponding to its subscript, where suffix k and d indicate the characteristic values and design values, respectively.

$$f_d = {}_f f_k\,,\quad T_d = {}_T T_k\,,\quad W_d = {}_W W_k\,,\quad {}_d = {}_\theta {}_k\,,\quad P_{h_d} = {}_{P_h} P_{h_k}$$

$$P_{v_d} = {}_{P_v} P_{v_k} \text{ (it can be shown as } P_{v_d} = {}_{P_v} P_{h_k} \tan(\delta + \psi) \text{ by using horizontal components)} \tag{9.1.4}$$

where

δ : wall friction force
ψ : angle between wall and vertical line (°)

② The following equation may be used for examining the stability of the superstructures on which mooring posts and mooring rings are installed. The subscript *d* indicates design value.

$$x_1 W_d + x_3 P_{v_d} \geq \gamma_a(h_1 T_d \cos\theta_d + x_2 T_d \sin\theta_d + h_2 P_{h_d}) \tag{9.1.5}$$

where

W : weight of superstructure (kN/m)

θ : traction angle (rad) (see **9.1.2 Actions**)
T : tractive force (kN/m)
P_v : resultant vertical earth pressure acting on super structure (kN/m)
P_h : resultant horizontal earth pressure action on super structure (kN/m)
x_1 : distance from the faceline of quaywall to superstructure weight acting point (m)
x_2 : distance from faceline of quaywall to tractive force acting point (m)
x_3 : distance from faceline of quaywall to acting point of resultant vertical earth pressure (m)
h_1 : distance from bottom of superstructure to tractive force acting point (m)
h_2 : distance from bottom of superstructure to acting point of resultant horizontal earth pressure (m)
γ_a : structural analysis factor

The design values in the equation can be calculated from equation **(9.1.4)**.

③ Partial Factors

In examining the stability of the sliding and overturning of the superstructures on which mooring posts and mooring rings are installed, the values shown in **Table 9.1.2** may be used as standard partial factors. These partial factors are determined taking account of the setting used in previous design methods.

Table 9.1.2 Partial Factors used in the Performance Verification of the Stability of Superstructures

			γ	α	μ/X_k	V
Sliding	γ_f	Friction coefficient	1.00	–	–	–
	γ_{Pv}	Resultant vertical earth pressure	1.00	–	–	–
	γ_{Ph}	Resultant horizontal earth pressure	1.00		–	–
	γ_W	Weight of superstructure	1.00	–	–	–
	γ_T	Tractive force	1.00	–	–	–
	γ_θ	Traction angle	1.00	–	–	–
	γ_a	Structural analysis factor	1.20	–	–	–
Overturning	γ_{Pv}	Resultant vertical earth pressure	1.00	–	–	–
	γ_{Ph}	Resultant horizontal earth pressure	1.00		–	–
	γ_W	Weight of superstructure	1.00	–	–	–
	γ_T	Tractive force	1.00	–	–	–
	γ_θ	Traction angle	1.00	–	–	–
	γ_a	Structural analysis factor	1.20	–	–	–

α: sensitivity coefficient, μ/X_k: deviation of average (average value/characteristic value), V: coefficient of variation

9.2 Fender Equipment

Public Notice

Performance Criteria for Fender System

Article 60

The performance criteria for fender system shall be as specified in the subsequent items:

(1) The fender system shall be properly installed and provided with the function satisfying the necessary specifications so as to enable the safe and smooth berthing and mooring in consideration of the environmental conditions to which the system concerned are subjected, the berthing and mooring conditions of ships, and the structure type of mooring facilities.

(2) The risk that the berthing energy of ships may exceed the absorption energy of the fender system under the variable action situation, in which the dominant actions is ship berthing, shall be equal to or less than the threshold level.

[Commentary]

(1) Performance Criteria of Fender Equipment

① Stability of Facilities (Usability)

(a) **Attached Table 55** shows the setting on the performance criteria and design situations except accidental situations, of fender equipment.

Attached Table 55 Setting on the Performance Criteria and Design Situations (excluding accidental situations) of Fender Equipment

Ministerial Ordinance			Public Notice			Performance requirements	Design situation			Verification item	Index of standard limit value
Article	Paragraph	Item	Article	Paragraph	Item		Situation	Dominating action	Non-dominating action		
33	1	2	60	1	2	Serviceability	Variable	Variable Ship berthing	–	Berthing energy of fender equipment	Absorption energy

(b) Variable Situations where Dominating Actions are Ship Berthing (Serviceability)

The verification of ship berthing is such that the risk of the berthing energy of ships exceeding the absorption energy of fender equipment shall be equal to or less than the limit value when ships are berthing.

[Technical Note]

9.2.1 Fundamentals of the Performance Verification of Fender Equipment

(1) When a ship is berthed to a wharf or when a moored ship moves owing to wind and wave forces, berthing force and friction force are generated between the ship and the mooring facility. To prevent damages to the ship's hull and mooring facility due to these forces, fender equipment are installed on the mooring facility. However, in case that ships are provided with fender equipment such as ship fenders or tires for small ships or certain types of ferries and the maneuvering of such a ship is done very carefully considering the energy absorption capacity of the fender equipment, the mooring facility does not necessarily have to be equipped with fender equipment, because the berthing force to the mooring facility is relatively low.

(2) For fender systems used as fender equipment, rubber and pneumatic fenders are commonly selected. Other types such as foam types, water pressure types, oil pressure types, suspended weight types, pile types, and timber types are also used.[2)]

(3) The performance verification procedure of rubber fenders, pneumatic fenders, and pile type fenders is as shown in **Fig. 9.2.1**.

(4) The performance of fenders has significant effects on the construction costs of mooring facilities, the maintenance costs after construction, and berthing efficiency. It is preferable for the section of fenders to consider not only their construction costs but also comprehensive costs of all aforementioned factors. In the cases of piled piers and dolphins, the effects of the reaction forces of fender systems are normally relevant, and hence in some cases

selection of high-performance fender systems, even if they are expensive, results in reducing the construction costs of quaywalls as a whole. In the cases of gravity-type quaywalls and sheet pile quaywalls on which the reaction forces of fender systems have no effects on the structural dimensions, the performance of fender system does not affect the construction costs of quaywalls. In some cases, however, selection of easy maintenance type fender system, even if they are expensive, results in cost saving in the long run, due to their maintenance costs after completion. There are also cases in which high-performance fender systems are selected to reduce the delay of ship berthing due to oceanographic and meteorological phenomena. Because this results in improving cargo handling efficiency.

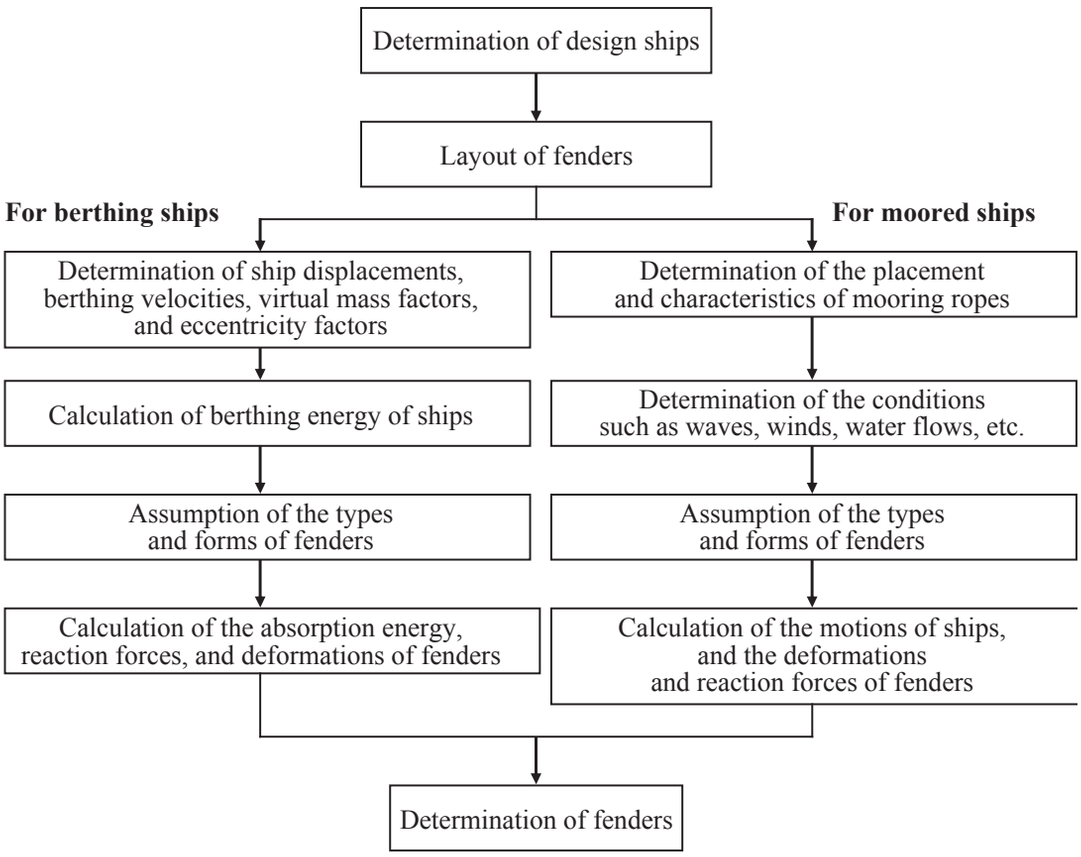

Fig. 9.2.1 Example of Performance Verification Procedures of Fenders

9.2.2 Actions

(1) Berthing Energy of Ships

① For calculating the berthing energy of ships in the performance verification of fenders, refer to **Part II, Chapter 8, 2.2 Actions Caused by Ship Berthing**.

② The partial factors used for calculating the berthing energy of ships in the performance verification of fenders shall be set at 1.0 for all the parameters.

(2) The calculation of berthing force is performed in general by obtaining the load-absorption energy curve of mooring facility and then preparing the load-absorption energy curve of a whole fender system at a certain point. As shown in **Fig. 9.2.2**, the berthing force P for a given berthing energy E_f can be obtained based on the load-absorption energy curve prepared by adding the absorption energy E_{f1} caused by fender deformation and the absorption energy E_{f2} caused by quaywall deformation.

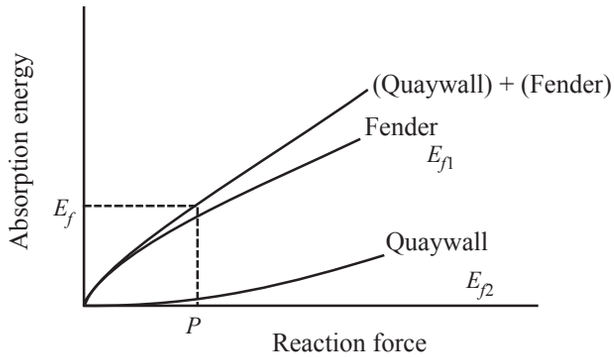

Fig. 9.2.2 Calculation of Berthing Force

(3) In case of mooring facilities that are exposed to wave actions, ships move in both the horizontal and vertical directions. The ship's motions may cause excessive shear deformation in fenders in addition to the normal compressive deformation, which sometimes leads to breakage of fenders. If the shearing force is assumed to be the friction force, the force is estimated at about 30% to 40% of the reaction force of the fender.

(4) Contact panels and similar means shall be installed on fender equipment as necessary to reduce surface pressure and thus to prevent berthing forces from acting on ships as a concentrated load. Synthetic resin plates or other materials are sometimes fixed in front of contact panels to reduce the shearing forces acting on fender systems.

9.2.3 Layout of Fenders [2), 7)]

(1) The layout and specification setting in the performance verification of fender equipment need to be appropriately performed to allow the safe and smooth berthing and mooring of ships, considering the natural conditions where the facilities concerned are placed, the berthing and mooring conditions of ships, and the structure type of mooring facilities.

(2) Fender equipment need to be appropriately placed so that ships have no direct contact with mooring facilities before the fender equipment absorb the berthing energy of design ships.

(3) Rubber fenders are normally placed at intervals of 5 to 20m. When a ship berths, a part near the bow or stern contacts the quaywall at first. It should be noted that since the ship has a curved surface at aforementioned contact parts, excessively wide fender intervals cause the ship to directly contact the quaywall, to which fenders are not placed, before the fenders sufficiently absorb the berthing energy. The intervals of about 5m normally cause no problem, but in the case that the intervals are 10m or more and thus, the part of the ship might directly contact the part of the quaywall to which fenders are not placed, it is preferable to construct the coping of fender placing parts projected out 0.2 to 0.5m from other parts. Another method is to hang a wood block in front of a rubber fender to make the block projected from other parts.

(4) In the cases of large quaywalls where fenders are placed at wide intervals and the fenders for small ships are placed in between them, it is preferable to adjust the front surfaces of the fenders for small ships backward of those for large ships to some extent. If the front surfaces of the fenders for small ships are inadequately adjusted, large ships may contact the fenders with a small energy absorption capacity before the fenders for large ships sufficiently absorb the berthing energy of the ships, causing the serious increase in the reaction forces of the fenders for small ships.

9.2.4 Performance Verification

[1] General

(1) It is preferable to appropriately select the types of fenders taking account of the following:

① Structural characteristics of mooring facilities and ships using them

② For mooring facilities subject to the effect of waves, the motions of moored ships and ship berthing conditions such as berthing angles.

③ Effects of the reaction forces of fender systems generated during ship berthing on the structures of mooring facilities

④ Variation ranges of the physical characteristics of fenders due to manufacturing errors, dynamic characteristics and thermal characteristics.

[2] Performance Verification

(1) The energy absorption due to the deformation of mooring facility is as follows:

① It can be generally assumed that there is no energy absorption due to the deformation of the main bodies of such rigid mooring facilities as gravity-type quaywalls, sheet pile quaywalls, quaywalls with relieving platform, and cellular-bulkhead type quaywalls.

② Detached piers, dolphins, piled piers, open-type wharves are classified into two types: one is the type with a rigid structure and the other with a flexible structure. There is no energy absorption due to the deformation of the former type facilities. On the other hand, there is energy absorption due to the deformation of the latter type facilities because of their flexibility, and the energy absorption is generally given by equation **(9.2.1)**.

$$E_1 = \int_0^{Y_1} g(y_1)dy_1 \tag{9.2.1}$$

where

E_1 : absorption energy due to the deformation of main body of mooring facility (Nm)
Y_1 : maximum displacement of main body of mooring facility (m)
$g(y_1)$: characteristics of reaction force caused by the deformation of main body of mooring facility (N)

Flexible facilities are normally made of steel materials. Since their performance required for the actions caused by the berthing forces of ships is serviceability and the responses are within an elastic limit, the relationship between the deflection and reaction forces of such mooring facilities is linear. When a mooring facility and its fender systems completely absorb the berthing energy of a ship, the absorption energy of the mooring facility is expressed by equation **(9.2.2)**, where C denotes the spring constant of the quaywall.

$$E_1 = \frac{1}{2}CY_1^2 \tag{9.2.2}$$

The same shall apply to the absorption energy of pile type fenders.

③ The single pile structure (SPS) is a type of structure that absorbs the berthing energy by the deformation of piles made of high tensile strength steel. In the performance verification of berthing dolphins that use SPS, it is preferable to evaluate the amount of energy absorption considering the residual deformation of the piles due to repeated berthing. As shown in **Fig. 9.2.3**, the amount of energy absorbed by piles is calculated from the displacement obtained by subtracting the residual displacement from the loading point displacement.[8)]
The loading point displacement with the residual displacement is calculated from equation (**9.2.3**).

$$y_{top} = A_1 y_0 + A_2 i_0 h + \frac{Ph^3}{3EI} \tag{9.2.3}$$

where

y_{top} : displacement of the pile at loading point, considering residual displacement (m)
y_0 : pile displacement at sea bottom at the time of initial loading (m)
i_0 : pile deflection angle at sea bottom at the time of initial loading (rad)
P : horizontal load (N)
h : height of loading point (m)
EI : flexual rigidity of pile (Nm^2)
A_1, A_2 : influence coefficients due to repeated loading

The time of initial loading indicates the situation where the largest load is initially applied among the past loadings.

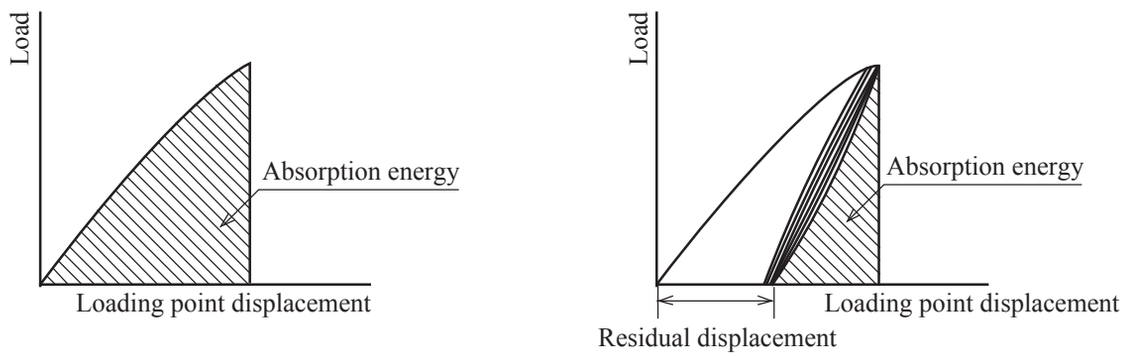

(a) Absorption energy at the time of initial loading (b) Absorption energy at the time of ship berthing

Fig. 9.2.3 Absorption Energy by Deformation of Piles

The values of influence coefficients due to repeated loading based on the result of an in situ full-scale loading experiment [9] and a model test [10] are proposed in **Table 9.2.1**.

Table 9.2.1 Values of Influence Coefficients due to Repeated Loading [8]

	For obtaining the maximum displacement	For obtaining the energy absorbed by the deformation of piles	For obtaining the residual displacement
A_1	1.4	0.4	0.8
A_2	1.2	0.6	0.5

(2) Calculation of the Absorption Energy by Fenders

In the cases of rigid structures where there is no energy absorption due to the deformation of the main bodies of mooring facilities, the absorption energy by fenders may be calculated from the following equation, where the subscript *d* indicates design value:

$$E_{s_d} = \phi E_{cat} \geq E_{f_d} \tag{9.2.4}$$

where

E_s : absorption energy by fender (kNm)
ϕ : manufacturing error of fender (tolerance)
E_{cat} : specified value of the absorption energy by fender (kNm)
E_f : berthing energy of ship (kNm)

The characteristic value of the berthing energy of a ship E_{fk} can be expressed by equation **(2.2.1)** in **Part II, Chapter 8, 2.2 Actions Caused by Ship Berthing.** Since the partial factors used for calculating the berthing energy of a ship are set at 1.0 for all parameters, the design value of the berthing energy of the ship E_{fd} is equal to its characteristic value E_{fk}.

(3) Energy Absorption by Fenders

There are various types of rubber fenders such as V-shaped, circular hollow, and rectangular hollow. Each of these types differs from others in terms of the relationship between the reaction force and deformation as well as the energy absorption rate. Manufacturers' catalogs show diagrams of the amount of energy absorption versus the deformation, and those of the reaction force versus the deformation for each type of fenders. It is convenient to use these diagrams.

Constant-reaction force type fenders such as V-shaped fenders are characterized with low reaction forces and high energy absorption rates. It should be borne in mind, however, that the total reaction force to the mooring facility may become large when a ship comes in contact with two to three fenders simultaneously. This is because of the fact that the reaction force level rises nearly to the maximum value when the energy absorption rate reaches to 1/3 of the design capacity on each fender.

(4) Consideration of Variation in Characteristics of Rubber Fenders

Factors that cause variations in characteristics of fenders include the product deviations from the standards,

aging in quality, dynamic characteristics i.e. velocity-dependent characteristics, creep characteristics, repetition characteristics i.e. compression frequency-dependent characteristics, oblique compression characteristics, and thermal characteristics. In the fenders for floating structures, these factors are important in the evaluation of the safety of the mooring equipment. In the fenders for mooring facilities, it is necessary to verify the performance of the fenders in consideration of the product deviations, dynamic characteristics, oblique compression characteristics and thermal characteristics. For example, when the product deviation (tolerance) of the fender is ±10%, it is preferable to employ the energy absorption characteristics lowered by 10% from the catalog value and to use the reaction force characteristics raised by 10% from the catalog value in the performance verification of the fenders and the mooring facility. With regard to dynamic characteristics, it is preferable to confirm that the reaction force of the fender at the time of ship berthing shall not exceed the standard value shown in the catalog in consideration of the berthing velocity of ships. It should also be borne in mind that the fender reaction force becomes higher in a low-temperature environment than in the standard temperature environment.

It has been recommended by a working group of the International Navigation Association (PIANC) to perform correction on the absorption energy and reaction force by applying correction coefficients of velocity and temperature in the selection of fender, in order to reflect changes in characteristics due to the environment in which the fender is used such as the ship's berthing velocity and the temperature [11]. The guideline [12] for the selection of fenders by using these correction coefficients is published. Actual values of these correction coefficients should be checked with the manufacturer, as they vary depending on the berthing velocity, temperature, and kind of rubber used for the fender. It should also be borne in mind that the reaction force exerts on the quaywall may become larger when a small ship is berthing at a high berthing velocity than when a large ship is berthing at a low berthing velocity.

(5) The berthing forces of ships may cause a permanent deformation of ship hull, and hence the type of fender systems should be carefully selected.[13), 14)] It is preferable to fix contact panels in front of fenders as necessary to reduce loads on ship hull.

Since damage to ship hull is affected by not only the magnitude of berthing force but also structural strength of the ship hull, it is preferable to widen the contact area of each fender system so that the fender contacts two ribs of the ship hull at the same time. Nagasawa [15] assumed that actions at the maximum berthing forces distributed over a sufficiently wide area are uniform over more than the rib space. He proposed to calculate the critical berthing forces causing plastic hinges to form at both ends of ship hull plate between ribs assumed as fixed condition. The report [16] of PIANC's Fender Committee includes the results of analyzing the effects of fender reaction forces on the strengths of ship hull structures. Kawakami et al.[13] performed the stress analysis of the ship hull structures on which the reaction forces of fender systems were acted. The results indicate that when a fender system contacts two or more ribs at the same time, the stresses exerted on the ship hull and the ribs are not greater than the yield points if the surface pressure is 290 kN/m^2 or less.

(6) A fender system should also be safe against the shearing force due to the friction between the fender and the ship hull generated by oblique berthing of ships. This force can be normally calculated by the equation suggested by Vasco Costa [17]. When a ship is berthing to the quaywall at an angle of 6 to 14º with the face line of the berth, this force becomes 10% to 25% of the berthing force of the ship.

9.3 Lighting Facilities

Public Notice

Performance Criteria of Lighting Facilities

Article 61

The performance criterion of lighting facilities shall be such that appropriate lighting facilities are installed so as to enable the safe and smooth utilization of the mooring facilities where cargo handling works, berthing and unberthing of ships, and going-in and going-out of people are taking place in consideration of the utilization conditions of the mooring facilities concerned.

[Technical Note]

9.3.1 Fundamentals of Performance Verification

(1) Appropriate lighting facilities shall be provided at the wharves and related areas where cargo handling works such as loading, unloading and transfer, berthing / leaving of ships, and use by passengers and others are carried out at night, in consideration of the use conditions of the concerned mooring facilities.

(2) The description here may be applied to the installation, improvement, and maintenance of the lighting facilities at the wharves where cargo handling, berthing and leaving, passenger use, etc. are performed at night.

(3) Many lighting facilities are designed these days to highlight the night views of structures, parks, watersides, etc. in urban fringes and tourist sites in particular to meet social needs for the lighting and other facilities in port facilities. In these cases, not only illumination but also light colors and color rendering properties are needed to give people pleasure, familiarity, and peace of mind. On the other hand, as lighting facilities have come into wide use, it has become essential to consider at the adverse effects of lighting of lighting on the surroundings and energy saving. The performance verification of lighting facilities should fully take account of these demands. It is preferable for the places where people interact such as amenity-oriented revetments, marinas, parks, promenades, etc. to properly examine lighting functions and individually take necessary measures suited to individual facilities.

9.3.2 Standard Intensity of Illumination

[1] General

(1) Standard intensity of illumination is an average horizontal-plane illumination and defined as the minimum value to safely and effectively use the facilities concerned. The objective generally used in designing lighting facilities is illumination. The horizontal illumination means the illumination of a floor surface or a ground surface. The average horizontal illumination is the average value.

(2) The illumination of lighting facilities shall be properly determined to enable the safe and smooth use of the facilities concerned, depending on the varieties and systems of work.

(3) The International Commission on Illumination (CIE) has been examining the criteria of illumination and published the **Lighting Guide** for outdoor work areas. The criteria include the recommendations for the regulation values of the uniformity ratios of illumination and glare as well as average illumination.

[2] Standard Intensity of Illumination for Outdoor Lighting

The values shown in **Table 9.3.1** may be used for the standard intensity of illumination of each type of outdoor facilities.

Table 9.3.1 Standard Intensity of Illumination for Outdoor Lighting

Facility			Standard intensity of illumination (lx)
Wharf	Apron	Passenger facilities, vehicle facilities, mooring facilities for pleasure boats, general cargo berths, container berths	50
		Slipways for pleasure boats, aprons for handling dangerous goods using pipelines	30
		Simple work aprons using pipelines and belt conveyors	20
	Yard	Container storage spaces, general cargo storage spaces, cargo handling yards, cargo transfer yards	20
	Path	Passenger gates, vehicle gates	75
		Passenger paths, vehicle paths	50
		Other paths	20
	Security	All facilities	1–5
Road and Park	Road	Main roads	20
		Other roads	10
	Parking lot	For ferries	20
		Others	10
	Park Green space	Garden paths	3

[3] Standard Intensity of Illumination for Indoor Lighting

The values shown in **Table 9.3.2** can be used for the standard intensity of illumination of each type of indoor facilities.

Table 9.3.2 Standard Intensity of Illumination of Indoor Lighting

Facility		Standard intensity of illumination (lx)
Passenger terminal	Waiting rooms	300
	Passenger boarding paths and gates	100
Shed and Warehouse	Cargo handling spaces for fishing boat berths	200
	Container freight stations, sheds exclusive use of cars	100
	Rough work sheds and warehouses	70
	Other sheds and warehouses	50

9.3.3 Selection of Light Sources

(1) Light source for wharf lighting is preferably selected considering the following requirements:

① The light source shall be of a high efficiency and long service life.

② The light source shall be stable against the variations of ambient temperature.

③ The light source shall provide a good light color and good color rendering performance.

④ The time of the stabilization of the light after turning-on shall be short.

(2) Any light source other than a light bulb shall be used together with an appropriate stabilizer.

9.3.4 Selection of Apparatuses

[1] Outdoor Lighting

It is preferable to select lighting for outdoor illumination in consideration of the following requirements:

① Lighting equipment shall be rainproof. When a large amount of flammable dangerous goods is to be handled in the proximity of the lighting equipment, lighting equipment shall be explosion-proof.

② Materials for the lamp, reflector surface, and illumination cover shall be of good quality and have high durability and good resistance against deterioration and corrosion.

③ Sockets shall be of appropriate type for the respective light source.

④ Stabilizers and the internal wiring shall be capable of withstanding the expected increase in the temperature of the equipment.

⑤ Lighting equipment shall be of high-efficiency type.

⑥ Luminous intensity distribution shall be controlled appropriately in consideration of the use of the equipment.

[2] Indoor Lighting

Lighting for indoor illumination shall be selected in consideration of the following requirements:

① Luminous intensity distribution shall be controlled appropriately in consideration of the use of the equipment.

② Sockets shall be of appropriate type for the respective light source.

③ Stabilizers and the internal wiring shall be capable of withstanding the expected increase in the temperature of the equipment.

④ Lighting equipment shall be of high-efficiency type.

9.3.5 Performance Verification

In the designing of lighting, the layout of lighting facilities shall be determined considering the items listed below for the lighting method, light source, and equipment selected, in consideration of the characteristics of the area where the equipment is to be installed. Those equipment whose influence area extends to the sea shall be deployed in such a way that they do not hinder the navigation of nearby ships.

① Standard intensity of illumination

② Distribution of intensity of illumination

③ Glare

④ Adverse effects of light and energy conservation considerations

⑤ Light color and color rendering performance

9.3.6 Maintenance

[1] Inspection

(1) Inspection shall be periodically performed on the following:

① Lighting status

② Stain and damage to apparatuses

③ Flaking of paint

(2) Illumination intensity should be measured at several selected points in the typical places of each facility.

9.4 Lifesaving Facilities

Public Notice

Performance Criterion of Lifesaving Equipment

Article 62
The performance criteria of lifesaving equipment shall be such that appropriate lifesaving equipment is provided and readily available as necessary so as to secure the safety of human beings on the mooring facilities to serve for passenger ships with the gross tonnage being equal to or larger than 500 tons.

9.5 Curbings

Public Notice

Performance Criteria of Curbing

Article 63
The performance criteria of curbing shall be as specified in the subsequent items:

(1) Curbing shall be installed at appropriate locations and provided with the dimensions necessary for ensuring the safe utilization of the mooring facilities while not hindering ship mooring and cargo handling in consideration of the structure types and the utilization conditions of the mooring facilities concerned.

(2) The risk of impairing the integrity of curbing shall be equal to or less than the threshold level under the variable action situation in which the dominant action is collision of vehicles.

[Commentary]

(1) Performance Criteria of Curbings

① Stability of Facilities (serviceability)
Attached Table 56 shows the setting on the performance criteria and design situations except accidental situations of curbings.

Attached Table 56 Setting on the Performance Criteria and Design Situations (excluding accidental situations) of Curbings

Ministerial Ordinance			Public Notice			Performance requirements	Design situation			Verification item	Index of standard limit value
Article	Paragraph	Item	Article	Paragraph	Item		Situation	Dominating action	Non-dominating action		
33	1	2	63	1	2	Serviceability	Variable	Car crash	–	Soundness of curbing	–

[Technical Note]

9.5.1 Fundamentals of Performance Verification

The structure, shape, layout, and materials of curbing shall be set properly in such a way that the safety of users is ensured and cargo handling work is not hindered, in consideration of the structural characteristics and the conditions of use of the mooring facilities.

9.5.2 Performance Verification

The distance intervals between curbings need to be shorter than the wheel treads of the cargo handling equipment and vehicles. They may be set at about 30cm in general to drain rainwater from the aprons. It is preferable, however, to set the intervals of curbings, which are installed at both side of mooring posts, at 1.5 - 2.5m. In the cases where vehicles are not expected to pass because fences or other barriers are set up to prohibit the passage of vehicles, there is no need to install curbings.

9.6 Vehicle Loading Facilities

Public Notice

Performance Criteria of Vehicle Ramps

Article 64
The performance criteria of vehicle ramps shall be such that they satisfy the necessary specifications corresponding to the dimensions and characteristics of vehicles which use the ramps.

[Technical Note]

(1) A proper value not less than those given in **Table 9.6.1** may be used as the widths of vehicle loading facilities. Regarding movable bridges, it is preferable, however, to properly take account of the characteristics of their structures. Small facilities means loading facilities exclusively used for small and light vehicles.

(2) A proper value not more than those given in **Table 9.6.1** may be used as the slopes of vehicle loading facilities. Regarding extension lengths of the horizontal parts, 7m and 4m are used for general type facility and small facility, respectively. It is preferable to properly set the slopes of the facilities frequently used for loading large container cars, taking account of the safety and conditions of use of large container car loading.

(3) The radii of the center lanes of curved sections may refer to the **Enforcement Regulations for Road Structures**. A proper radius of 15m or more may be generally used for the curve radii.[24)]

(4) The range of vertical movement distance of the movable part of small and general facilities is frequently determined by adding 1m to tidal range.

(5) It is preferable to properly install signs and marks depending on the characteristics and use conditions of the structures of the facilities concerned.

Table 9.6.1 Widths and Gradient of Vehicle Loading Facilities

Type of facility	Number of lanes	Width (m)	Gradient (%)	
			Fixed part	Movable part
Facility exclusively used for loading vehicles with a width of not more than 1.7m (small facility)	1	3.00	12	17
	2	5.00		
Facility exclusively used for loading	1	3.75	10	12
Vehicles with a width of not more than 2.5m	2	6.50		
Facility frequently used for loading large container cars	1	4.00	–	–
	2	7.00		

9.7 Water Supply Facilities

Public Notice

Performance Criteria of Water Supply Facilities

Article 65
The provisions in Article 89 shall be applied to the performance criteria of water supply facilities with modification as necessary.

9.8 Drainage Facilities

Public Notice

Performance Criteria of Drainage Facilities

Article 66
The performance criteria of the drainage facilities shall be such that they are installed at appropriate locations and provided with the necessary functions and dimensions in consideration of the quality of water to be drained at and the structural characteristics of the mooring facilities as well as and their utilization conditions.

[Technical Note]

Mooring facilities shall be provided with drainage facilities such as drains and drainage holes, as necessary, taking account of the drainage quality and the structural characteristics and conditions of use of the mooring facilities concerned.

9.9 Fueling Facilities and Electric Power Supply Facilities

Public Notice

Performance Criteria of Fueling Facilities and Electric Power Supply Facilities

Article 67
The performance criteria of fueling facilities and electric power supply facilities shall be as specified in the subsequent items:

(1) The fueling facilities and electric power supply facilities shall be installed at appropriate locations and provided with the required fueling capacity or electric power supply capacity so as to enable the safe and smooth fueling and electric power supply to ships and others in consideration of the structural characteristics and the utilization conditions the mooring facilities concerned.

(2) In the cases where oil pipes are laid under pavements, the risk of impairing the integrity of oil pipes shall be equal to or less than a threshold level under the variable action situation in which the dominant action is imposed load.

[Commentary]

(1) Performance Criteria of Fueling Pipes

① Stability of Fueling Pipes (serviceability)
Attached Table 57 shows the setting on the performance criteria and design situations (except accidental situations) of fueling pipes.

Attached Table 57 Setting on the Performance Criteria and Design Situations (excluding accidental situations) of Fueling Pipes

Ministerial Ordinance			Public Notice			Performance requirements	Design situation			Verification item	Index of standard limit value
Article	Paragraph	Item	Article	Paragraph	Item		Situation	Dominating actions	Non-dominating actions		
33	1	2	67	1	2	Serviceability	Variable	Surcharge	–	Soundness of fueling pipes	–

[Technical Note]

(1) A mooring facility shall be provided, as necessary, with fueling and/or electric power supply facilities that allow safe and efficient fueling and power feeding, in consideration of the size of ships to moor at the facility, situation of the cargo handling, and structural characteristics of the mooring facility.

(2) Fueling and electric power supply facilities shall safely and efficiently supply a required quantity within the mooring time of ships without disturbing cargo handling work, considering the scales of the ships at berth.

9.10 Passenger Boarding Facilities

Public Notice

Performance Criteria of Passenger Boarding Facilities

Article 68
The provisions in Articles 91 or 92 shall be applied to the performance criteria of passenger boarding facilities with modification as necessary.

9.11 Fences, Doors, Ropes, etc.

Public Notice

Performance Criteria of Fences, Doors, and Ropes

Article 69
The performance criteria of fences, doors, ropes, and others shall be such that they are installed at appropriate locations as necessary and provided with the necessary dimensions so as to secure the safety of passengers, to reserve the space for passenger paths, to prevent the intrusion of vehicles, and others in the mooring facilities and the related facilities.

9.12 Monitoring Equipment

Public Notice

Performance Criteria of Monitoring Equipment

Article 70
The performance criteria of monitoring equipment shall be as specified in the subsequent items:

(1) The monitoring equipment shall be installed at appropriate locations as necessary and satisfy the necessary specifications so as to secure the safety of passengers, to maintain the public security, to prevent the intrusion of vehicles, and others in the mooring facilities and the related facilities.

(2) The monitoring equipment shall be provided with the functions necessary for preserving the monitoring records.

[Technical Note]

[1] Fundamentals of Performance Verification

(1) International port facilities such as quaywalls and basins used by international ships shall provide and maintain equipment to ensure security in compliance with the **Law on Ensuring the Security of International Ships and Port Facilities (Law No. 31 of 2004).** International ships mean the passenger ships engaged in international voyage, i.e. voyage from a port in a country to a port in another country, and the cargo ships with a gross tonnage of 500 tons or more.

(2) Monitoring equipment needs to be installed to enable monitoring in restricted areas considering the conditions of use of the mooring facilities concerned and natural conditions in its vicinities.

(3) Monitoring equipment means monitoring cameras and related equipment.

9.13 Signs

Public Notice

Performance Criteria of Signs

Article 71
The performance criteria of signs shall be such that they are installed at appropriate locations as necessary and satisfy the specifications required for indicating the locations of various facilities, guiding users, and warning possible dangers, and others with the objectives of securing the safety and convenience of users and preventing accidents and disasters.

[Technical Note]

9.13.1 Placement of Signs and Marks

(1) In order to ensure the safety of port users and convenient use of ports, it is preferable to place signs and marks in the following cases:

① When it is necessary to ensure that port users could arrive at their destinations smoothly and safely and to provide guideboards for the location of port facilities.

② When it is necessary to warn port users about dangers associated with the use of facilities and cargo handling works.

③ When it is necessary to provide instructions to port users about methods to use facilities and guide them to ensure safe and smooth use of facilities.

④ When it is necessary to regulate the behavior of port users to ensure their safety and smooth activities, to prevent disasters such as fire and falling accident, and to prevent environmental pollution by littering.

9.13.2 Forms and Installation Sites of Signs

The forms of signs shall be such that those used for ordinary roads. It is preferable to properly determine the sizes, colors, and character sizes so that port users can easily recognize them.

9.14 Aprons

Public Notice

Performance Criteria of Aprons

Article 72
The performance criteria of aprons shall be as specified in the subsequent items:

(1) Aprons shall be provided with the necessary dimensions for enabling the safe and smooth cargo handling works.

(2) The surface of aprons shall be provided with the gradient necessary for draining rainwater and other surface water.

(3) Aprons shall be paved with appropriate materials in consideration of imposed load and the usage conditions of the mooring facilities.

(4) The risk of incurring damage to the pavement to the extent of affecting cargo handling works shall be equal to or less than a threshold level under the variable action situation in which the dominant action is imposed load.

[Commentary]

(1) Performance Criteria of Aprons

① Width (usability)
Apron widths shall be properly set to allow safe and smooth cargo handling.

② Gradient (usability)
Gradient of apron shall be properly set to drain water and other surface waters.

③ Pavement Materials (usability)
Aprons shall be paved with proper materials taking account of the surcharges and the conditions of use of mooring facilities.

④ Pavements (serviceability)
Attached Table 58 shows the setting on the performance criteria and design situations (except accidental situations) of apron pavements.

Attached Table 58 Setting on the Performance Criteria and Design Situations (excluding accidental situations) of Apron Pavements

Ministerial Ordinance			Public Notice			Performance requirements	Design situation			Verification item	Index of standard limit value
Article	Paragraph	Item	Article	Paragraph	Item		Situation	Dominating action	Non-dominating action		
33	1	2	72	1	4	Serviceability	Variable	Surcharge	–	Soundness of pavement	–

[Technical Note]

9.14.1 Specifications of Aprons

[1] Apron Widths

(1) The apron widths of ordinary mooring facilities may generally refer to the values shown in **Table 9.14.1**.

Table 9.14.1 Apron Widths

Berth water depth (m)	Apron width (m)
Less than 4.5	10
4.5 or more and less than 7.5	15
7.5 or more	20

(2) The determination of apron widths of general cargo wharves shall normally take account of the spaces for cranes, temporary storage, cargo handling, and traffic paths. It is preferable to set the widths at not less than 15 - 20m when sheds are installed at the back and fork lifts are used, and not less than 10 - 15m when roads are at the back and open storage yards are in the immediate vicinity and trucks are allowed to drive into the aprons for cargo handling operations.

[2] Gradient of Apron

(1) Aprons are where cargo handling is performed and closely related to the conditions of cargo handling operation at the backyards, and hence cross slopes need to be properly determined taking these conditions into consideration.

(2) Aprons normally have a down slope of 1 - 2% toward the sea. Shallow draft wharves have steep slopes. Aprons in snowy places often have relatively steep slopes. In some cases, reverse slopes are used depending on the conditions of use of aprons and environmental consideration.

(3) Since the settlement of backfilling may cause slopes to be reversed, construction should be carefully performed.

[3] Countermeasures for Apron Settlement

(1) For aprons, appropriate countermeasures need to be taken to prevent excessive settlement due to sand washing-out or consolidation of the lower landfill material that would hinder cargo handling operation and the traffic of vehicles.

(2) In general, the material below the subgrade of apron pavement is subject to settlement due to consolidation. There is also a risk of settlement due to washing-out of the landfill material used as part of the layers below the subgrade through joint sections of quaywall, or compression of the backfilling material behind the quaywall. There are many cases of the failure of pavement that are thought to be attributable mainly to these types of settlement. Therefore, it is preferable to consider measures for preventing these types of settlement such as the provision of countermeasure against sand washing-out and the compaction of the backfilling material behind the quaywall.

9.14.2 Performance Verification

[1] General

The types of apron pavements shall be properly selected in a comprehensive judgment taking account of the soil properties below the subgrade, constructability, surrounding pavement conditions, cargo handling methods, economic efficiencies, and maintenance.

[2] Fundamentals of Performance Verification

(1) The performance verification of apron pavements shall be such that pavement structures are stable under the surcharges by cargo handling vehicles and related equipment.

(2) **Fig. 9.14.1** shows an example of the performance verification procedures of apron pavements.

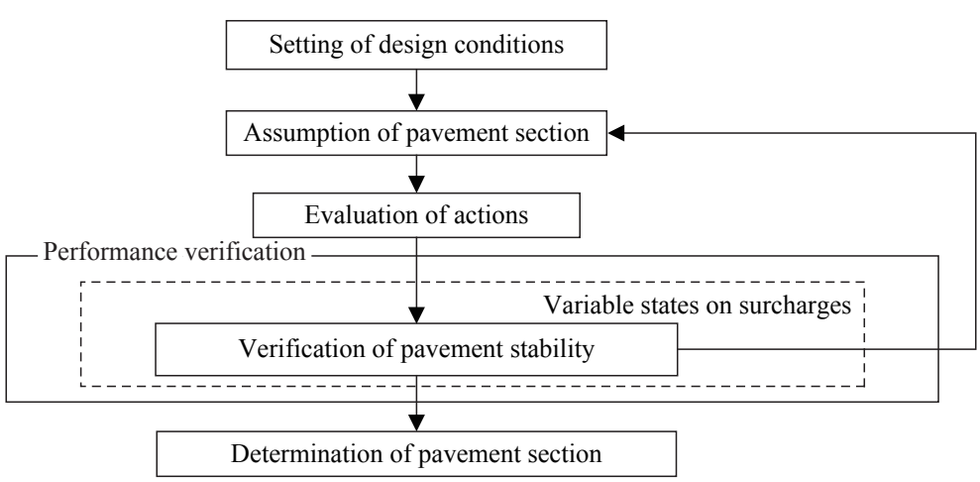

Fig. 9.14.1 Example of Procedures for the Performance Verification of Apron Pavements

[3] Actions

(1) Actions to be considered in the performance verification of apron pavements are generally the surcharges by trucks, truck cranes, rough terrain cranes, all terrain cranes, fork lift trucks, straddle carriers, etc., depending on the types of cargoes and cargo handling methods. Here, truck cranes, rough terrain cranes, and all terrain cranes are denoted as the movable cranes. The performance verification of apron pavements normally takes account of the ground contact areas on which surcharges are applied, setting the maximum surcharges and the ground contact pressures to make the pavement thickness become maximum.

(2) The characteristic values of the surcharges used for the verification of apron pavements may refer to **Table 9.14.2**.[27] Outriggers are applied to the cases of movable cranes, where a wheel means a single wheel or dual wheels i.e. two wheels are laterally connected. In the cases where the loads of actually used cargo handling equipment can be precisely set, this table may not be used.

Table 9.14.2 Characteristic Values of the Actions considered in the Performance Verification of Apron Pavements

Type of action (cargo handling equipment load)		Maximum load of an outrigger or a wheel (kN)	Ground contact area of an outrigger or a wheel (cm^2)	Ground contact pressure (N/cm^2)
Movable crane truck crane, rough terrain crane, all terrain crane	Type 20	220	1,250	176
	Type 25	260	1,300	200
	Type 30	310	1,400	221
	Type 40	390	1,650	236
	Type 50	470	1,900	247
	Type 80	690	2,550	271
	Type 100	830	3,000	277
	Type 120	970	3,350	290
	Type 150	1170	3,900	300
Truck	25 ton class	100	1,000	100
Tractor trailer	for 20ft	50	1,000	50
	for 40ft	50	1,000	50
Fork lift truck	2t	25	350	71
	3.5t	45	600	75
	6t	75	1,000	75
	10t	125	1,550	81
	15t	185	2,250	82
	20t	245	2,950	83
	25t	305	3,600	85
	35t	425	4,950	86
Straddle carrier		125	1,550	81

[4] Performance Verification for Concrete Pavements

(1) Procedures of Performance Verification

① **Fig. 9.14.2** shows an example of the procedures of the performance verification for concrete pavements.

② It is preferable to perform the verification of concrete pavements both on base course thickness, and concrete slab thickness considering, cyclic numbers of actions, conditions of the bearing capacities of roadbeds.

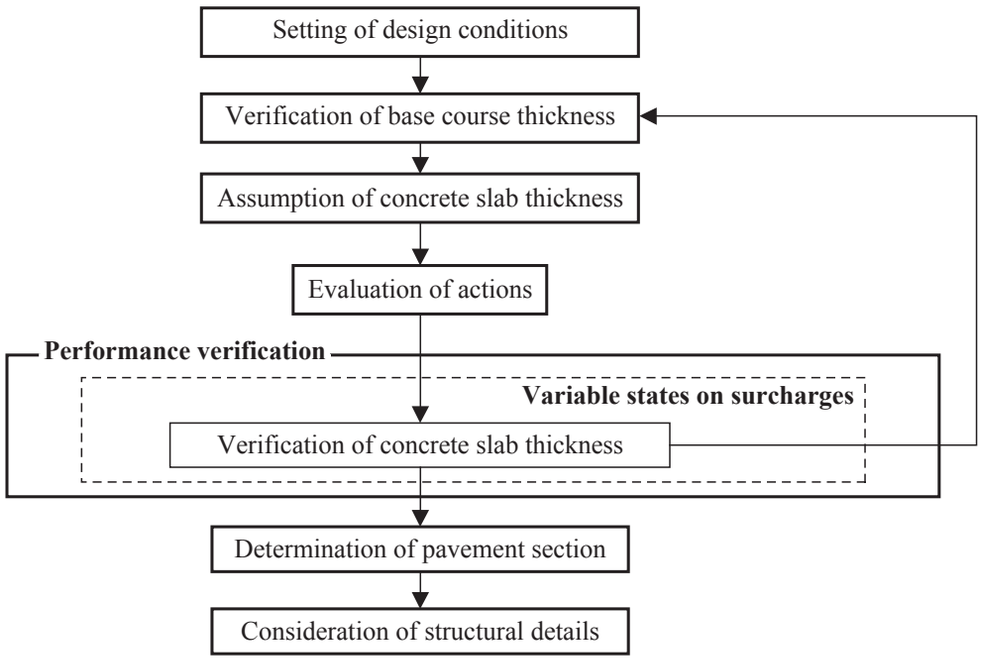

Fig. 9.14.2 Example of the Procedures of Performance Verification for Concrete Pavements

(2) Design Conditions

① The design conditions considering the performance verification are generally as follows:

(a) Design working life
(b) Conditions of Action
(c) Cyclic numbers of actions
(d) Subgrade bearing capacity
(e) Materials used

② Design working life
The design working life of concrete pavements shall be properly set considering the conditions of use and other related conditions of mooring facilities. The design working life of concrete pavements used for the aprons of quaywalls and other facilities may be generally set at 20 years.

③ Action conditions
The design action conditions are those requiring the maximum concrete slab thickness among the types of actions to be considered. The characteristic values of actions may be set referring to **Table 9.14.3**. The partial factors used for calculating design values may be set at 1.0. The "Action classification" in **Table 9.14.3** is the classification needed when using **(3)** ② **(d) Empirical method of setting concrete slab thickness**.

Table 9.14.3 Reference Values for the Action Conditions of Concrete Pavements used for the Aprons of Quaywalls and Other Facilities

Action classification	Type of action		Action (kN)	Ground contact radius (cm)
CP_1	Fork lift truck	2t	25	10.6
	Tractor trailer	for 20ft, 40ft	50	17.8
	Fork lift truck	3.5t	45	13.8
CP_2	Fork lift truck	6t	75	17.8
CP_3	Truck	25 ton class	100	17.8
	Fork lift truck	10t	125	22.2
	Straddle carrier		125	22.2
	Fork lift truck	15t	185	26.8
CP_4	Mobile crane (truck crane, rough terrain crane, all terrain crane)	Type 20	220	19.9
	Fork lift truck	20t	245	30.7
	Mobile crane (truck crane, rough terrain crane, all terrain crane)	Type 25	260	20.3

④ Roadbed bearing capacity

The performance verification of concrete pavements may set the subgrade bearing capacity using the design bearing capacity coefficient K_{30}.

(a) The design bearing capacity coefficient K_{30} of the subgrade can be obtained from the results of the plate loading test specified. The design bearing capacity coefficient K_{30} is generally set as the value corresponding to a settlement of 0.125cm. It is preferable to perform plate loading tests at one or two locations per 50m in the faceline directions of quaywalls.

(b) When setting the design bearing capacity coefficientK_{30} in an area of subgrade made of the same materials, it is preferable to calculate the values of K_{30} from equation **(9.14.1)** using the measured values of three or more points excluding extreme values.

(Bearing capacity coefficient K_{30} of subgrade)=
(Average of bearing capacity coefficients of multiple points)

$$-\left\{\frac{\text{(Maximum value of bearing capacity coefficient)} - \text{(Minimum value of bearing capacity coefficient)}}{C}\right\} \tag{9.14.1}$$

where

C : coefficient used for calculating bearing capacity coefficients. The values in **Table 9.14.4** may be used.

Table 9.14.4 Reference Values for the Coefficient C

Number of test points (n)	3	4	5	6	7	8	9	10 or more
C	1.91	2.24	2.48	2.67	2.83	2.96	3.08	3.18

(c) When the subgrade has already been constructed, the bearing capacity coefficient should be obtained by performing a plate load test on the subgrade at the condition of maximum moisture content. When it is not possible to conduct a plate loading test in such condition, the bearing capacity coefficient should be obtained by correcting the value using equation (**9.14.2**). The CBR values in equation should be obtained from undisturbed soil samples.

Bearing capacity coefficient of subgrade (corrected value)
=Bearing capacity coefficient calculated from measured value

$$\times \frac{\text{CBR (immersed in water for 4 days)}}{\text{CBR (natural moisture content)}} \tag{9.14.2}$$

⑤ Calculation of the cyclic numbers of actions
The following methods are used for calculating the cyclic numbers of loading during design working life:

(a) To estimate the cyclic numbers from the past records of similar-scale ports

(b) To estimate the cyclic numbers from the cargo handling volumes of the ports concerned
The method [27] (b) to estimate the cyclic numbers from the cargo handling volumes of the ports may refer to the cyclic number calculation method [30] to verify the performance of the fatigue limit states of the superstructures of piled piers proposed by Nagao et al.

(3) Performance Verification

① Verification of base course thickness

(a) It is preferable to prepare a test base course and set base course thickness at value which makes the bearing capacity coefficient equal to 200N/cm^3. In the cases where the preparation of a test base course is difficult, the base course thickness may be directly set using the design curves shown in **Fig. 9.14.3**. The minimum base course thickness is generally set at 15cm.

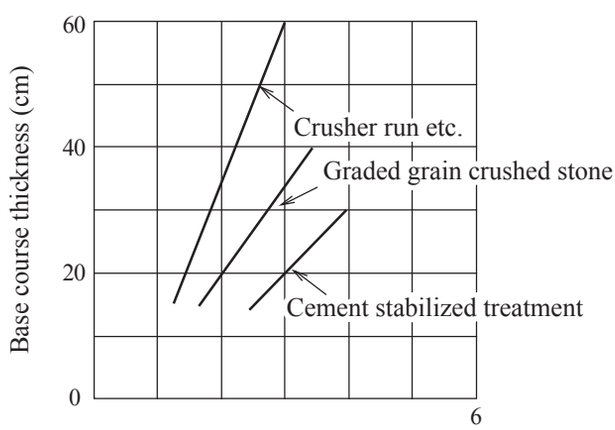

$$\frac{\text{Bearing capacity coefficient of base course}}{\text{Bearing capacity coefficient of subgrade}} = \frac{K_1}{K}$$

K_1 is the bearing capacity coefficient of base course K_{30} (200N/cm^3).
K_2 is the bearing capacity coefficient of subgrade K_{30}

Fig. 9.14.3 Design Curves of Base Course Thickness [28]

(b) The base course thickness of concrete pavements may be set referring to **Table 9.14.5** prepared based on the past records.

Table 9.14.5 Reference Values for Base Course Thickness of Concrete Pavements

Design condition	Base course thickness				
Design bearing capacity coefficient of base course K_{30} (N/cm3)	Upper subbase course		Lower subbase course		Total base course thickness
	Cement stabilized base	Graded grain material	Graded grain material	Crusher run etc.	
50 or more and less than 70	–	40	–	20	60
	20	–	20	–	40
	25	–	–	30	55
70 or more and less than 100	–	20	15	–	35
	–	20	–	20	40
	15	–	15	–	30
	15	–	–	15	30
100 or more	–	20	–	–	20
	15	–	–	–	15

② Verification of concrete slab thickness

(a) Bending strengths of concrete slabs
The bending strengths of concrete slabs may be set at 450N/cm^2 for 28 days test piece.

(b) **Fig. 9.14.4** shows the relation between concrete slab thickness and bending stress. The bending stresses are calculated using an equation called Arlington formula. The symbols CP_1 - CP_4 in **Fig. 9.14.4** are the classification names needed for using **(d) Empirical method of setting concrete slab thickness**.

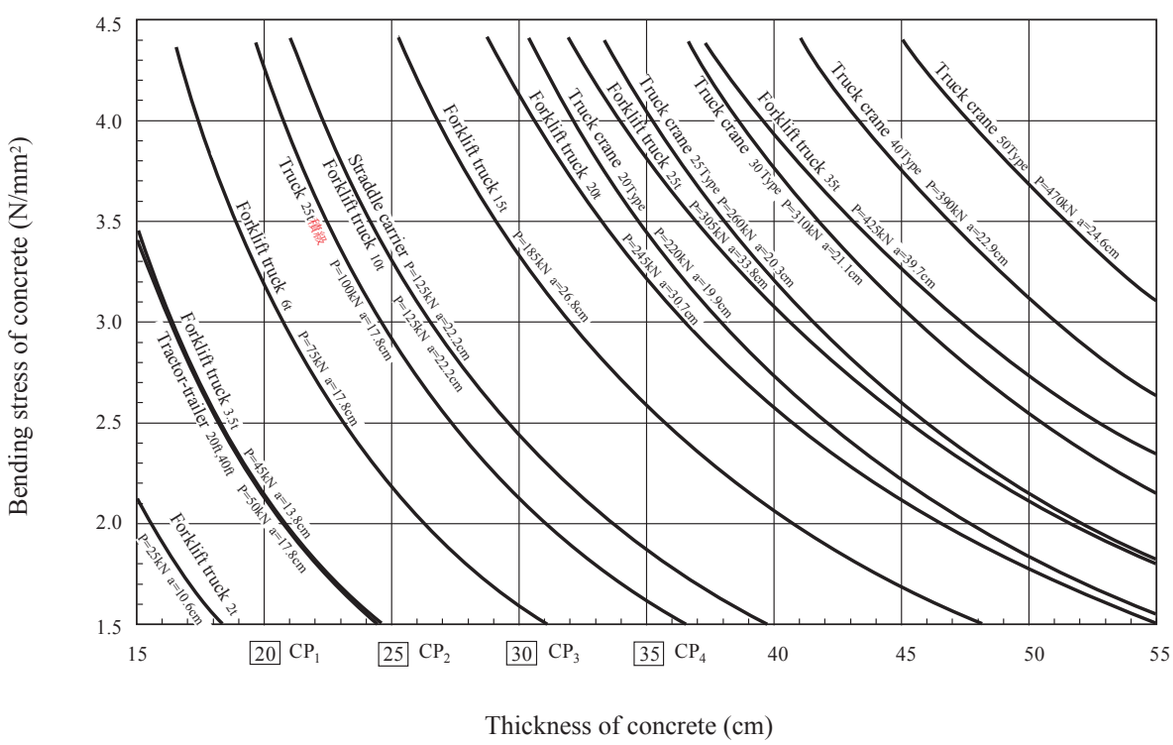

Fig. 9.14.4 Relation between Concrete Slab Thickness and Bending Stress

(c) Setting of concrete slab thickness
The method of setting the thickness of concrete slabs in compliance with the concept of **Pavement Design and Construction Guide** [28] has been proposed.[27] In this method, the fatigue characteristics of concrete slabs are calculated based on the wheel load stresses imposed on concrete slabs and their cyclic numbers during design working life. And the relation between the above mentioned characteristics and the degree of fatigue as a failure criterion is proposed to set the thickness of concrete slabs.[27] The following outlines the method:

1) Allowable cyclic numbers of wheel load stresses are calculated from the fatigue equation **(9.14.3)**.

$$N_i = 10^{\{(1.000-SL)/0.044\}} \qquad 1.0 \geq SL > 0.9$$
$$N_i = 10^{\{(1.077-SL)/0.077\}} \qquad 0.9 \geq SL > 0.8$$
$$N_i = 10^{\{(1.224-SL)/0.118\}} \qquad 0.8 \geq SL \qquad (9.14.3)$$

where

N_i : allowable cyclic number of wheel load stress imposed on concrete slab

SL : wheel load stress/design reference bending strength (= 450N/cm^2).

2) Calculation of the Degree of Fatigue

The degree of fatigue of a concrete slab is calculated from equation **(9.14.4)**.

$$FD = \sum \left(\frac{n_i}{N_i} \right) \qquad (9.14.4)$$

where

FD : degree of fatigue

n_i : cyclic number of wheel load i

N_i : allowable cyclic number of wheel load stress imposed on concrete slab

3) Setting of Concrete Slab Thickness

Using the degree of fatigue as the failure criterion of a concrete slab, concrete slab thickness is set so that the degree of fatigue FD is equal to 1.0 or less.

(d) Empirical method of setting concrete slab thickness

1) The concrete slab thickness set referring to the empirical values given in **Table 9.14.5** may be considered to have the same performance as the one set using the method of **(c) Setting Concrete Slab Thickness**.

Table 9.14.6 Reference Values for Concrete Slab Thickness

Action classification	Concrete slab thickness (cm)
CP_1	20
CP_2	25
CP_3	30
CP_4	35
Applied to piled pier slab	10

2) The "Action classification" in **Table 9.14.6** corresponds to the one given in **Table 9.14.3**. It should be noted in classifying actions that there are cases where the maximum loads are not equivalent to the value shown in **Table 9.14.2**. In such cases, the classification with the closest and larger value is used. For example, if the maximum load per outrigger of a truck crane is 120kN, it is regarded as a type 20 truck crane; if the maximum load per wheel of a fork lift truck is 64kN, it is regarded as a 6 ton fork lift truck.

3) In **Fig.9.14.4**, it is preferable to verify the concrete slab thickness by separately, for the load plotted at the right side of a curve of type 25 truck crane.

4) Regarding the setting of concrete slab thickness based on the values given in **Table 9.14.6**, it is preferable to take account of PC pavement and continuously reinforced concrete pavement for the design load exceeding CP_4, because non-reinforced concrete pavement needs a very thick slab. Since cranes such as truck cranes have larger ground contact pressures than other cargo handling equipment, it is preferable to lay iron plates or the like under the outriggers to reduce pressure when using them on aprons.

(4) Structural Details

① Layer preventing frost penetration

In the design of pavement in the cold regions where the pavement is subject to freezing and thawing, layer preventing frost penetration should be provided.

② Iron mesh

(a) It is effective to bury iron mesh in a concrete slab structure to prevent cracking.

(b) It is preferable to overlap the junctions of reinforcing bars. The overlap length and the depth of the reinforcing bars from the surface need to be properly set considering the thickness of the concrete slab.

③ Joints

It is preferable to place joints on concrete pavements to allow the concrete slabs to expand, shrink, and warp freely to some extent, reducing stresses.

(a) Joints of the concrete pavement of apron shall be arranged appropriately, considering the size of apron, structure of mooring facilities, the type of joint and load condition. In addition, joints shall have a structure that is appropriate for the type of joint.

(b) Longitudinal joint

1) Longitudinal construction joints shall generally be press-type structured and made of tie bars. Tie bars are, however, not used for piled pier slabs. It is preferable for the longitudinal joints adjoining the superstructures of quaywalls and sheds to have a structure using both joint sealing compounds and joint fillers. It is preferable to set longitudinal joints at proper intervals depending on paving machines used, total pavement widths, and traveling crane beds. It is preferable to place longitudinal joints on the shoulder of backfill, the joints of quaywalls, and the position of sheet-pile anchorages to reduce the effects of change in bearing capacity of and below base courses and the joints of quaywalls.

2) Tie-bars are provided to prevent adjoining slabs from separating, and sinking / rising of either slab at joints. Tiebars also serve as a reinforcement to transfer the sectional force. Because the apron pavement has a relatively small width and is physically constrained by the main structure of the quaywall or sheds, separation of apron concrete slabs at joints rarely occurs. However, it is necessary to provide tie-bars at longitudinal construction joints to prevent sinking / rising of either slab at joints due to differential settlement of layers below the base course, and to accommodate a wide variety in the directions of traffic load that is not observed on ordinary roads.

(c) Transverse joints

1) Transverse shrinkage joints
Transverse shrinkage joints shall generally be dummy-type structured and made of dowel bars. On piled pier slabs, however, dowel bars are not used. It is preferable for shrinkage joints to be placed on the joints of quaywalls.

2) Transverse construction joints
Transverse construction joints shall generally be press-type and made of dowel bars. On piled pier slabs, however, dowel bars are not used. Transverse construction joints are placed at the end of daily work or inevitably placed due to rain during construction or the failures of construction machines or other equipment. It is preferable for transverse construction joints to fit position with transverse shrinkage joints.

3) Transverse expansion joints
It is preferable for transverse expansion joints to generally have a structure using both joint sealing compounds and joint fillers in upper and lower parts and use dowel bars. On piled pier slabs, however, dowel bars are not used. It is preferable to set transverse expansion joints at proper intervals depending on construction conditions. Expansion joints are the weakest points of pavements, hence, consideration is needed for reducing the number of their placement points as much as possible.

4) Dowel bars
Dowel bars have a function to transfer loads and prevent the unevenness of adjoining slabs. In either case of transverse shrinkage joints, transfer construction joints, or transfer expansion joints, dowels bars are placed to fully transfer loads.

(d) Joint structures

Fig. 9.14.5 - 9.14.8 show standard joint structures.

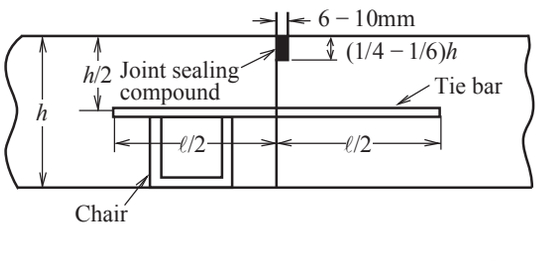

Fig. 9.14.5 Longitudinal Construction Joint

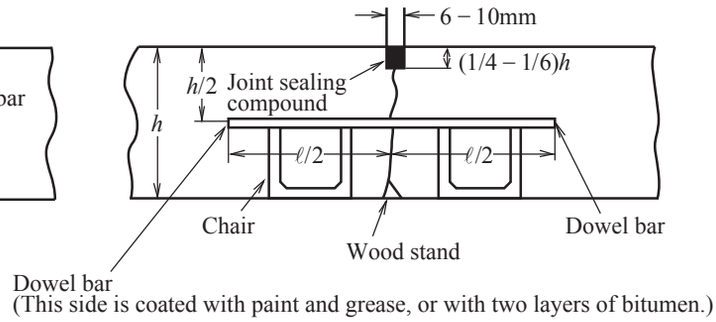

Fig. 9.14.6 Transverse Shrinkage Joint

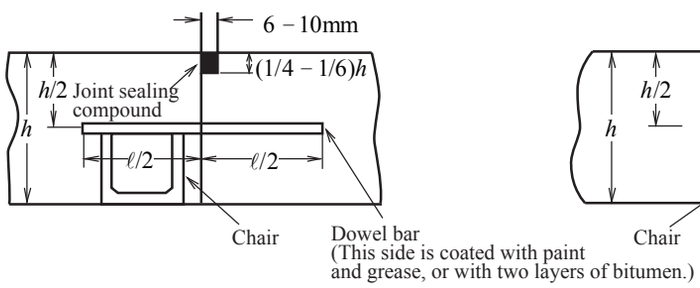

Fig. 9.14.7 Transverse Construction Joint

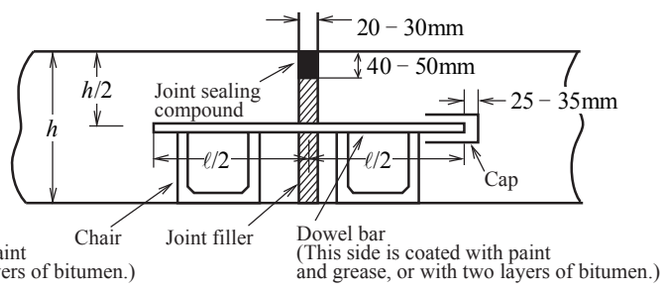

Fig. 9.14.8 Transverse Expansion Joint

④ Tie bars and dowel bars

(a) Tie bars and dowel bars shall be properly selected considering the traveling loads imposed on apron pavements in all directions.

(b) The specifications and placement intervals of tie bars and dowel bars may refer to the values shown in **Table 9.14.7**.

Table 9.14.7 Reference Values for the Specifications and Placement Intervals of Tie Bars and Dowel Bars

Action classification	Slab thickness (cm)	Tie bar			Dowel bar		
		Diameter (cm)	Length (cm)	Interval (cm)	Diameter (cm)	Length (cm)	Interval (cm)
CP_1	20	25	80	45	25	50	45
CP_2	25	25	100	45	25	50	45
CP_3	30	32	100	40	32	60	40
CP_4	35	32	100	40	32	60	40

Note: The values of tie bars and dowel bars are those of SD295A (deformed steel bar) specified in JIS G 3112 and of SS400 (round steel bar) specified in JIS G 3101, respectively.

⑤ End protection

An end protection work along the landward side of pavement shall be provided at a location where there is a risk of destruction of the base course due to infiltration of rain water or destruction of the concrete slab and base course due to heavy loading.

[5] Performance Verification of Asphalt Pavements

(1) Procedures of Performance Verification

Fig. 9.14.9 shows an example of the procedures of the performance verification for asphalt pavements.

(2) Design Conditions

① The design conditions considered in the performance verification are generally as follows:

(a) Design working life
(b) Action conditions
(c) Cyclic numbers of actions
(d) Bearing capacity of subgrade
(e) Materials used

② Design working life
The design working life of asphalt pavements shall be properly set considering the usage conditions of mooring facilities. The design working life of asphalt pavements used for the aprons of quaywalls and may be generally set at 10 years.

③ Conditions of action
Among the kinds of subject actions, the conditions of action shall be those requiring the maximum asphalt pavement thickness.

④ Calculation of the cyclic numbers of actions
For calculating of the cyclic numbers of actions, refer to **9.14. [4] (2) ⑤ Calculation of the cyclic numbers of actions**.

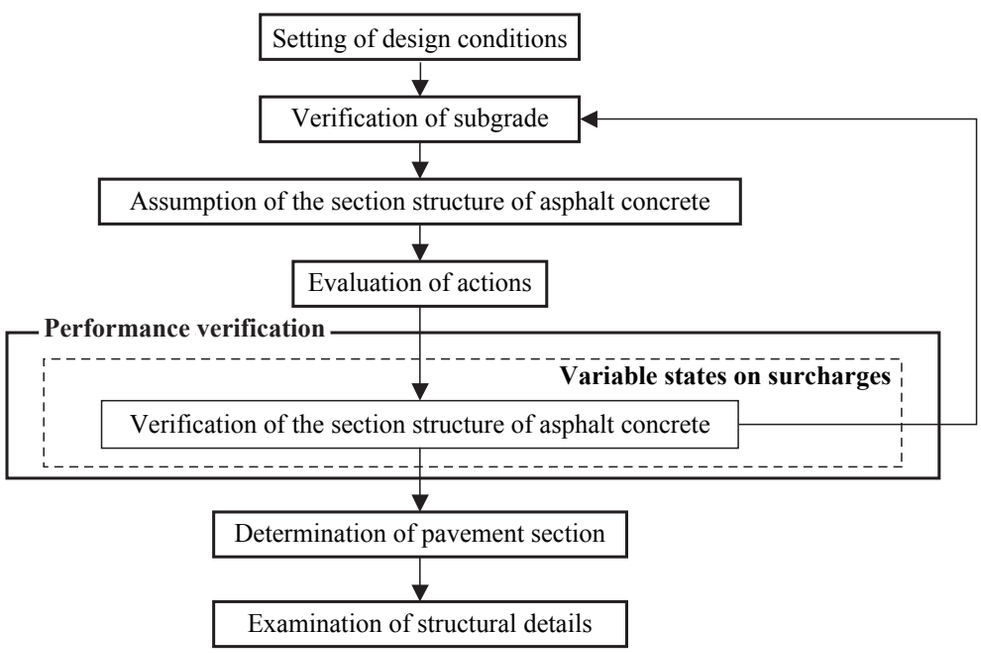

Fig. 9.14.9 Example of Procedures of Performance Verification for Asphalt Pavements

⑤ Subgrade bearing capacity
The design *CBR* of the subgrade in the pavement area subject to the performance verification is determined by tamping down subgrade soil containing natural moisture and immersing it in water for four days to obtain the CBR.

$$\text{CBR (corrected)} = \text{On-site CBR} \times \frac{\text{CBR (immersed in water for 4 days)}}{\text{CBR (natural moisture content)}} \tag{9.14.5}$$

Design CBR can be obtained from equation **(9.14.6)** using the above-defined CBR excluding extreme values.

$$\text{Design CBR} = \text{Average CBRs for all test points} - \frac{\text{Maximum CBR} - \text{Minimum CBR}}{C} \tag{9.14.6}$$

where C is given in **Table 9.14.4**.

(4) Performance Verification

① Verification of asphalt concrete pavement structure

(a) Setting of pavement sections
Pavement structure is determined so that the equivalent conversion asphalt concrete sections of the assumed pavement sections are not less than required equivalent conversion sections.

(b) Required equivalent conversion asphalt concrete pavement thickness
Required equivalent conversion asphalt concrete pavement thickness T_A is calculated from equation **(9.14.7)**. The variables subscripted with d mean design values.

$$T_{Ad} = \frac{3.84 N_d^{0.16}}{CBR^{0.3}} \tag{9.14.7}$$

where
T_A : required equivalent conversion asphalt concrete pavement thickness (cm)
N : the value of cyclic number of action during design working life n_i converted to 49kN wheel load. It is calculated from the following equation. The partial factors can be set at 1.0.

$$N_d = \sum_{i=1}^{m} \left[\left(\frac{\gamma_{P_i} P_i}{49} \right)^4 n_i \right] \tag{9.14.8}$$

where
P_i : wheel load (kN)
n_i : cyclic number of wheel load P_i
m : setting number of loaded state

(c) Equivalent conversion asphalt concrete pavement thickness of assumed section
The equivalent conversion asphalt concrete pavement thickness T_A of the assumed section can be calculated from equation **(9.13.9)**.

$$T_A' = \sum_{i=1}^{n} [a_i h_i] \tag{9.14.9}$$

where
T_A : equivalent conversion asphalt concrete pavement thickness of assumed section (cm)
h_i : thickness of layer i (cm)
a_i : equivalent conversion factor of material and work method used for pavement layer i. It may be referred to **Table 9.14.8**.
n : number of layers

Table 9.14.8 Equivalent Conversion Factor of Asphalt Concrete

Layer	Construction method / material	Requirements	Equivalent conversion factor	Remark
Surface and binder courses	Hot asphalt mixture for surface and binder courses	–	1.00	AC I – AC IV
Base course	Bituminous stabilization	Marshall stability level 3.43kN or greater	0.80	A-treated material II
		Marshall stability level 2.45 to 3.43kN	0.55	A-treated material I
	Grading adjustment	Corrected CBR 80 or greater	0.35	Grading adjusted material
Subbase course	Crusher-run, slag, sand, etc.	Corrected CBR 30 or greater	0.25	
		Corrected CBR 20 to 30	0.20	Grain material

② Example of empirical verification of asphalt concrete pavement composition
Table 9.14.10 shows an example of empirical verification of asphalt concrete pavement composition. The table is prepared referring to the action conditions shown in **Table 9.14.9**. The symbols H and T_A' in **Table 9.14.10** express total pavement thickness and the equivalent conversion asphalt concrete pavement thickness of the assumed section, respectively. If the design CBR of a subgrade is 2 or more and less than 3, it is preferable to

replace it with one using good quality materials or to add a water sealing layer. If it is less than 2, it is preferable to replace it with good quality materials and set the pavement thickness once again.

Table 9.14.9 Reference Values for Action Conditions of Action for Asphalt Pavements on Aprons of Quaywalls

Action classification	Cargo handling machine	
AP_1	Tractor trailer	20ft, 40ft
AP_2	Fork lift truck	2t
	Fork lift truck	3.5t
	Fork lift truck	6t
AP_3	Fork lift truck	10t
	Fork lift truck	15t
	Truck	25 ton class
	Straddle carrier	
	Mobile crane (truck crane, rough terrain crane, all terrain crane)	Type 20
AP_4	Mobile crane (truck crane, rough terrain crane, all terrain crane)	Type 25

③ The type and material quality of asphalt concrete can be set as listed in **Table 9.14.11**

Table 9.14.11 Type and Material Quality of Asphalt Concrete

Type	AC I	AC II	AC III	AC IV
Use	For surface course		For binder course	
Number of blows for Marshall stability test	50times	75times	50times	75times
Marshall stability (kN) Flow value (1/100cm) Porosity (%) Degree of saturation (%)	4.9 or greater 20–40 3–5 75–85	8.8 or greater 20–40 2–5 75–85	4.9 or greater 15–40 3–6 65–80	8.8 or greater 15–40 3–6 65–85

Note: The columns of "number of blows 75 times" apply to cases where the ground contact pressure of tire with the design load is 70 N/cm^2 or greater, or where the traffic of large vehicles is heavy and rutting is expected.

(5) Structural Details

The placement of frost-heaving suppression bed is needed in cold regions where freezing and thawing, may occur if pavement thickness is less than freezing depth.

Table 9.14.10 Examples of Composition of Asphalt Pavement

Condition of actions		Composition of pavement								
Classification of actions	Design CBR of subgrade (%)	Surface course		Binder course		Base course		Subbase course	Total thickness	
		Type	h_1 (cm)	Type	h_2 (cm)	Type	h_3 (cm)	h_4 (cm)	H (cm)	T'_A (cm)
AP_1	Equal to or above 3 and less than 5	AC I	5	AC III	5	Grading adjusted material	25	35	70	25.8
		AC I	5	–	–	A-treated material I	25	35	65	25.8
	Equal to or above 5 and less than 8	AC I	5	AC III	5	Grading adjusted material	20	25	55	22.0
		AC I	5	–	–	A-treated material I	20	30	55	22.0
	Equal to or above 8 and less than 12	AC I	5	AC III	5	Grading adjusted material	15	20	45	19.3
		AC I	5	–	–	A-treated material I	15	30	50	19.3
	Equal to or above 12 and less than 20	AC I	5	AC III	5	Grading adjusted material	15	15	40	18.3
		AC I	5	–	–	A-treated material I	15	20	40	17.3
	Equal to or above 20	AC I	5	AC III	5	Grading adjusted material	15	15	40	18.3
		AC I	5	–	–	A-treated material I	15	15	35	16.3
	On the deck slab of open-type wharf	AC I	5	AC III	4 or greater	–	–	–	9 or greater	–
AP_2	Equal to or above 3 and less than 5	AC II	5	AC IV	5	Grading adjusted material	25	35	70	25.8
		AC II	5	–	–	A-treated material I	25	35	65	25.8
	Equal to or above 5 and less than 8	AC II	5	AC IV	5	Grading adjusted material	20	25	55	22.0
		AC II	5	–	–	A-treated material I	20	30	55	22.0
	Equal to or above 8 and less than 12	AC II	5	AC IV	5	Grading adjusted material	15	20	45	19.3
		AC II	5	–	–	A-treated material I	15	30	50	19.3
	Equal to or above 12 and less than 20	AC II	5	AC IV	5	Grading adjusted material	15	15	40	18.3
		AC II	5	–	–	A-treated material I	15	20	40	17.3
	Equal to or above 20	AC II	5	AC IV	5	Grading adjusted material	15	15	40	18.3
		AC II	5	–	–	A-treated material I	15	15	35	16.3
	On the deck slab of open-type wharf	AC II	5	AC IV	4 or greater	–	–	–	9 or greater	–
AP_3	Equal to or above 3 and less than 5	AC II	5	AC IV	15	Grading adjusted material	30	45	95	40.0
		AC II	5	AC IV	10	A-treated material II	20	45	80	40.0
	Equal to or above 5 and less than 8	AC II	5	AC IV	15	Grading adjusted material	25	30	75	34.8
		AC II	5	AC IV	10	A-treated material II	20	20	55	35.0
	Equal to or above 8 and less than 12	AC II	5	AC IV	15	Grading adjusted material	15	20	55	29.3
		AC II	5	AC IV	10	A-treated material II	15	15	45	30.0
	Equal to or above 12 and less than 20	AC II	5	AC IV	15	Grading adjusted material	15	15	50	28.3
		AC II	5	AC IV	10	A-treated material II	15	15	45	30.0
	Equal to or above 20	AC II	5	AC IV	15	Grading adjusted material	15	15	50	28.3
		AC II	5	AC IV	10	A-treated material II	15	15	45	30.0
	On the deck slab of open-type wharf	AC II	5	AC IV	4 or greater	–	–	–	9 or greater	–
AP_4	Equal to or above 3 and less than 5	AC II	5	AC IV	15	Grading adjusted material	40	60	120	46.0
		AC II	5	AC IV	10	A-treated material II	20	70	105	45.0
	Equal to or above 5 and less than 8	AC II	5	AC IV	15	Grading adjusted material	30	45	95	39.5
		AC II	5	AC IV	10	A-treated material II	20	40	75	39.0
	Equal to or above 8 and less than 12	AC II	5	AC IV	15	Grading adjusted material	25	30	75	34.8
		AC II	5	AC IV	10	A-treated material II	15	35	65	34.0
	Equal to or above 12 and less than 20	AC II	5	AC IV	15	Grading adjusted material	15	25	60	30.3
		AC II	5	AC IV	10	A-treated material II	15	15	45	30.0
	Equal to or above 20	AC II	5	AC IV	15	Grading adjusted material	15	15	50	28.3
		AC II	5	AC IV	10	A-treated material II	15	15	45	30.0
	On the deck slab of open-type wharf	AC II	5	AC IV	4 or greater	–	–	–	9 or greater	–

Note: In case of the deck slab of piled pier, the boxes of the binder course in Table 9.14.10 refer to the value for the total of filling material and binder course. This does not necessarily have to be asphalt concrete.

9.15 Foundations for Cargo Handling Equipment

Public Notice

Performance Criteria of Foundations for Cargo Handling Equipment

Article 73

1 The performance criteria of the foundations for cargo handling equipment shall be as specified in the subsequent items in consideration of the types of cargo handling equipment and the structural type of foundations:

(1) The foundations shall have the dimensions necessary for enabling the safe and smooth operations of cargo handling works, traveling of cargo handling equipment, and others.

(2) The foundations shall satisfy the following criteria under the variable action situation in which the dominant actions are Level 1 earthquake ground motions and imposed load:

(a) In the case of pile-type structures, the risk that the axial force acting on a pile may exceed the resistance stress caused by ground failure shall be equal to or less than the threshold level.

(b) In the case of pile-type structures, the risk that the stress in a pile may exceed the yield stress shall be equal to or less than the threshold level.

(c) The risk of impairing the integrity of beam components shall be equal to or less than the threshold level.

(d) In the cases of pile-less structures, the risk of beam sliding shall be equal to or less than the threshold level.

(3) The amount of beam deflection shall be equal to or less than the threshold level under the variable action situation in which the dominant actions is imposed load.

2 In addition to the provisions in the preceding paragraph, the performance criteria for the foundations of cargo handling equipment to be installed on the high earthquake-resistance facilities shall be such that the degree of damage owing to the action of Level 2 earthquake ground motions, which is the dominant action of the accidental action situation, is equal to or less than the threshold level corresponding to the performance requirement.

[Commentary]

(1) Performance Criteria of the Foundations for Cargo Handling Equipment

① The specifications of the foundations for cargo handling equipment shall be properly set according to the types of cargo handling equipment and the structural types of foundations to allow safe and smooth cargo handling operations and the safe and smooth traveling and other operations of cargo handling equipment.

② Piles and Beams (Serviceability)

(a) **Attached Table 59** shows the setting on the performance criteria and design situations (except accidental situations) of the foundations for cargo handling equipment.

Attached Table 59 Setting on the Performance Criteria and Design Situations (excluding accidental situations) of the Foundations for Cargo Handling Equipment

Ministerial Ordinance			Public Notice			Performance requirements	Design situation			Verification item	Index of standard limit value
Article	Paragraph	Item	Article	Paragraph	Item		Situation	Dominating action	Non-dominating action		
33	1	2	73	1	2a	Serviceability	Variable	L1 earthquake ground motion (Surcharge*3))	Self weight, earth pressure	Axial force acting on pile*1)	Resistance force against ground failure (push in, pull out)
					2b					Yield of pile*1)	Design yield strength
					2c					Section failure of beam	Design section resistance (ultimate limit state)
					2d					Sliding of beam*2)	Limit value on sliding
					3			(Surcharge*3))	Self weight, earth pressure	Deflection of beam	Limit value of deflection

*1) Limited to the structures where foundation piles are used for the foundations for cargo handling equipment
*2) Limited to the structures where foundation piles are not used for the foundations for cargo handling equipment
*3) It is an action applied from a cargo handling machine to its foundation and is properly set according to design situations.

(b) Axial Forces Acting on Piles in the Cases of Pile-type Structures
The verification of axial forces acting on piles in the cases of pile-type structures shall be such that the risk of the axial forces acting on piles being greater than the resistance forces against ground failure is not more than a limit value.

(c) Yield of Piles in the Cases of Pile-type Structures
The yield verification of piles in the cases of pile-type structures shall be such that the risk of the stress generated in a pile being greater than the yield is not more than the limit value.

(d) Section Failure of Beams
The section failure verification of beams shall be such that the risk of the design section force generated in a beam component being greater than the design section resistance is not more than the limit value.

(e) Beam Sliding in the Cases of Pile-less Structures
The verification of beam sliding in the cases of pile-less structures shall be such that the risk of beam sliding is not more than the limit value.

(f) Beam Deflection
The verification of beam deflection shall be such that the amount of deflection generated in a beam being greater than the limit value of deflection is not more than the limit value under the variable situations where dominating action is surcharge.

③ Foundations for Cargo Handling Equipment Installed in High Earthquake-Resistance facilities (Restorability)
Restorability shall be ensured under the accidental situations in respect of Level 2 earthquake ground motions.

Attached Table 60 Setting on the Performance Criteria and Design Situations limited to Accidental Situations of the Foundations for Cargo Handling Equipment in High Earthquake-resistance Facilities

Ministerial Ordinance			Public Notice			Performance requirements	Design situation			Verification item	Index of standard limit value
Article	Paragraph	Item	Article	Paragraph	Item		Situation	Dominating action	Non-dominating action		
33	1	2	73	2	–	Restorability	Accidental	L2 earthquake ground motion	Self weight, surcharge, earth pressure	Damage	–

[Technical Note]

9.15.1 Fundamentals of Performance Verification

(1) The specifications of the foundations for cargo handling equipment shall be properly set according to the types of cargo handling equipment and the structural types of foundations to allow safe and smooth cargo handling operations and the safe and smooth traveling of cargo handling equipment.

(2) The foundation for rail-type traveling cargo handling equipment needs to be designed appropriately in consideration of the external forces that act on the foundation, allowable displacement for the foundation, degree of difficulty of maintenance, effects on the wharf structure, and construction and maintenance costs.

(3) **Fig. 9.15.1** shows an example of the procedures for the performance verification of the foundations for cargo handling equipment.

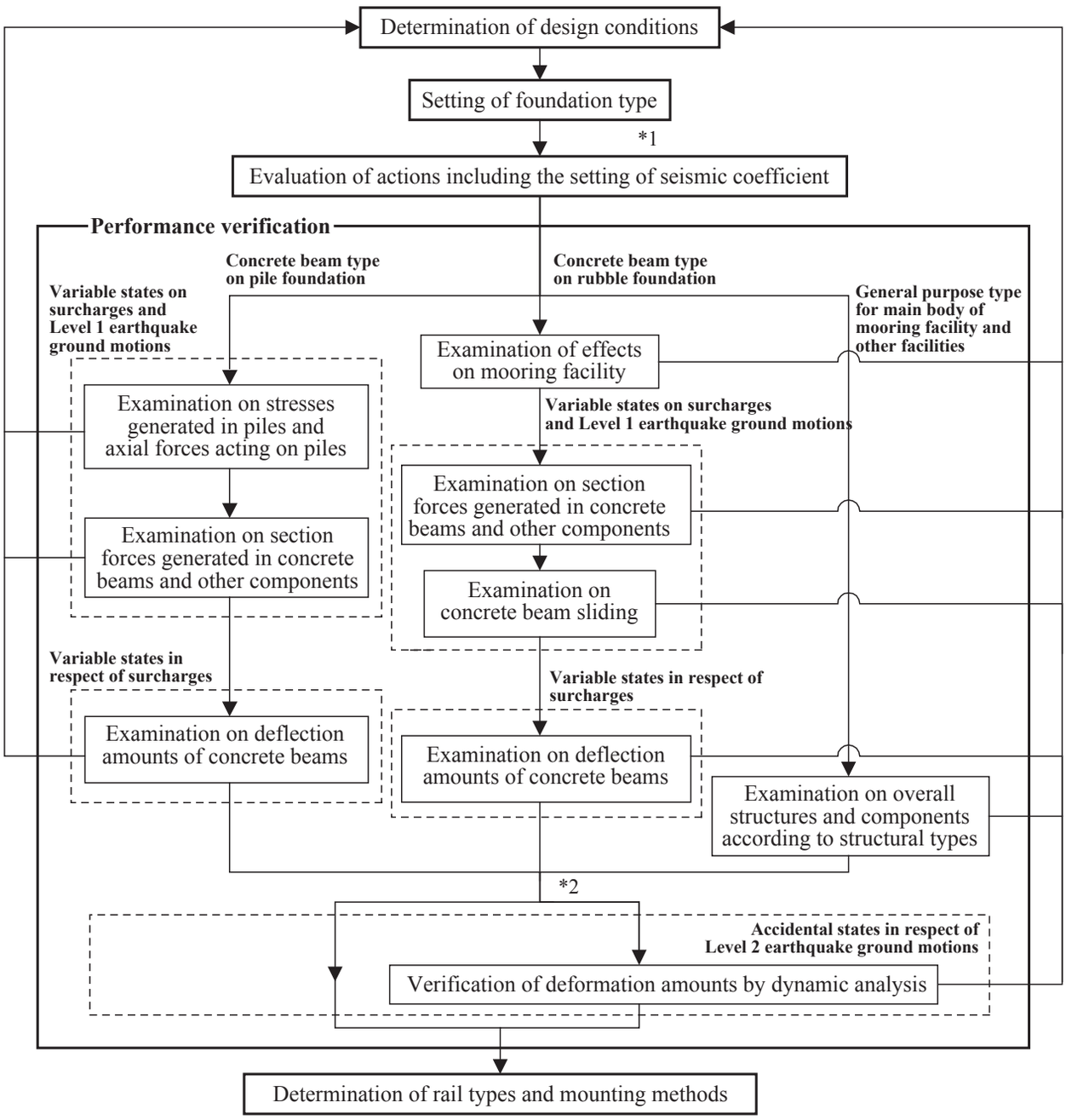

*1 Since the evaluation of the effects of liquefaction is not included in this chart, it should be considered separately.
*2 The foundations for cargo handling equipment installed in high earthquake-resistance facilities are verified on Level 2 earthquake ground motions.

Fig. 9.15.1 Example of Procedures of the Performance Verification for the Foundations for Cargo Handling Equipment

(4) Types of Foundations for Rail Traveling Equipment

① Foundation type that connects piles by reinforced concrete beams on pile foundations
This type is used for soft ground where uneven settlement is expected. It is also used for the foundations for large cargo handling equipment on good quality sand ground.

② Foundation type that uses other facilities such as the main bodies of mooring facilities
This type uses the reinforced concrete beams of piled piers, the main bodies of mooring facilities, such as the superstructures of caisson-type quaywalls or the wall anchorages of sheet-pile quaywalls as the foundation for the cargo handling equipment. The performance verification of facilities shall be conducted in advance considering the actions caused by cargo handling equipment. In such cases, overall construction costs are

often reduced. When one leg is on the main body of a mooring facility and the other leg is on an independent foundation, caution is needed to avoid uneven settlement. It should be noted that ground motions may cause the displacement of crane foundations, resulting in the displacement or derailing of crane legs. Rigid legs of gantry cranes are normally not placed on piled piers. Since the tip of jetty-type piled piers are weak to the actions caused by ship berthing or tractive forces or earthquakes, special reinforcement is needed.

③ Foundation type that places concrete beams on rubble foundations
This type is used for relatively good quality ground with a small possibility of settlement.

(5) Limit Value of Displacement of Rails
The displacement of rails is small at the time of completion of construction, but it increases with the lapse of time. Therefore, it is general practice to make construction errors as small as possible. Tolerance of the displacement differs somewhat among manufacturers of equipment. **Table 9.15.1** [31] indicates the installation and maintenance standards that are commonly employed.

Table 9.15.1 Examples of Technical Standards of Rail Truck Laying and Maintenance

Item	Installation standards	Maintenance requirements (upper limits for operation)
Rail span	±10 mm or less for the entire rail length	±15 mm or less for the entire rail length
Lateral and vertical warps of rail	5 mm or less per 10 m of rails	15 mm or less per 10m of rails
Elevation difference between seaward and landward rails	1/1000 of rail span or less	1/500 of rail span
Gradient in the travelling direction	1/500 or less	1/250 or less
Straightness	±50 mm or less for the entire rail length	±80 mm or less for the entire rail length
Rail joints	Vertical and lateral differences: 0.5 mm or less	Vertical and lateral differences: 1mm or less
	Gap: 5 mm or less	Gap: 5 mm or less
Wear of the head of rail	–	10% or less of the original dimension

9.15.2 Actions

(1) Forces that act on the foundation for cargo handling equipment shall be determined appropriately in due consideration of the type, and operation conditions.

(2) The forces are assumed to act on the entire length of rails during operation or earthquakes. At the time of storms, the forces assumed to act on the section where the crane is stationed.

(3) For the wheel loads that act on the rails when the crane is operational, a traveling load that is equal to 120% of the maximum static wheel load can be considered. However, this can be considered to be 110% of the maximum static wheel pressure of the crane when the traveling speed is less than 60 m/min.[34]

9.15.3 Performance Verification of Pile-type Foundations

[1] Concrete Beams

(1) The performance verification of concrete beams placed on pile foundations may be conducted assuming that they are continuous beams supported by pile heads. The effects of beams contacting the ground are ignored.

(2) Concrete beams constructed on pile foundation need to be stable against the contact pressure between the rail and concrete, and against the stress transmitted from the rail.

(3) The rail stress is usually calculated by assuming that the rail is an infinite continuous beam supported by elastic foundation. This method is often used for the cases where the wheel loads are spread over the beam by inserting an elastic material such as rubber pads between the rail and the concrete beam to prevent crushing of concrete.

(4) Solving Method of the Infinite Continuous Beam Supported by Elastic Foundation
The rail stress and the contact pressure between the rail and concrete can be calculated using the method described in **9.15.4 [2]Concrete Beams**. In this case, the symbols *Ec*, *Ic*, and *K* in equation (**9.15.4**) should be replaced as follows:s

Ec : modulus of elasticity of the rail

Ic : moment of inertia of the rail
K : modulus of elasticity of the material placed under the rail, when tie pads are used, use the modulus of elasticity of the tie pad

When the bearing stress is too high, it should be reduced by inserting elastic plates under the rail.

(7) The fastening force between the rail and the foundation can be calculated by using the beam theory on elastic foundation,[36] but it is necessary to have a sufficient allowance to avoid the effect of impact. For calculation of the fastening force for the cases where the double elastic fastening method is employed, refer to Minemura's study.[37] In many cases, bolts with a diameter of about 22 mm are used at intervals of about 50 cm.

[2] Maximum Static Resistance Forces of Piles

(1) Piles shall be stable against the actions caused by cargo handling equipment and foundations.

(2) The action that exerts on the piles should be the reaction force at each supporting point calculated in accordance with **[1] Concrete Beams.**

(3) The maximum static resistance forces of piles may be calculated referring to **Part III, Chapter 2, 2.4 Pile Foundations**.

(4) In the cases where piles are affected by the surfaces of rupture of active earth pressures, the performance verification of bearing piles described in **2.8 Quaywalls with Relieving Platforms** may be referred to.

(5) When piles are under the influence of the active earth pressure failure plane, the required embedment length differs between the seaward piles and landward piles. However, it is common practice to use foundation piles of the same length for both the seaward and landward, to avoid a differential settlement of the foundation. When the piles are driven into the bearing stratum, there is no need to use the same embedded length.

9.15.4 Performance Verification in the Cases of Pile-less Foundation

[1] Analysis of Effect on Quaywall [38]

(1) When no pile is used to support the foundation for cargo handling equipment, the effect of the actions of the cargo handling equipment and its foundation on the main structure of mooring facilities shall be examined.

(2) Application of surcharge on the area behind a gravity-type structure increases the earth pressure and may cause forward sliding of the quaywall. The influence of a concentrated load on the earth pressure is large in the zone at the levels immediately below the loading point. But the influence becomes smaller as the depth increases. When the quaywall height is small and the quaywall lengthis short, care should be given because of strong influence of concentrated load. When the load is applied directly on a quaywall, the subsoil reaction force increases. In particular, when the load is applied on the quaywall at its front end, the subsoil reaction force at the front toe becomes significantly large. In a quaywall of small width and short length, this tendency of reaction force increase is amplified and thus care should be given.

(3) In ordinary sheet pile quaywalls, the maximum stress occurs between the tie member installation point and the sea bottom. However, when a concentrated load is expected to act on the area behind the sheet pile wall, the maximum stress may occur at the level near the tie member installation point. The concentrated load, however, rarely causes an adverse effect on the embedded part of the sheet pile. It is preferable to provide a sufficient causes earth covering thickness for the tie members to avoid adverse effects on the tie members.

[2] Concrete Beams

(1) The reinforced concrete beams placed on the rubble foundations laid on the ground shall ensure stability against flexural moments, shear forces and deflection, and their amounts of settlement shall be less than a limit value of settlement.

(2) The characteristic values of the flexural moments, shear forces and deflection of the reinforced concrete beams placed on rubble foundations can be obtained from equations **(9.15.1) - (9.15.6)**. The variables subscripted with k denote characteristic values.

① In the cases where loads act near the middle of beam

$$M_k = \sqrt[4]{\frac{E_c I_c}{64K}} \sum W_i e^{-\beta x_i} (\cos \beta x_i - \sin \beta x_i) \tag{9.15.1}$$

$$S_k = \frac{1}{2}\sum W_i e^{-\beta x_i} \cos \beta x_i \tag{9.15.2}$$

$$y = \sqrt[4]{\frac{1}{64 E_c I_c K^3}} \sum W_i e^{-\beta x_i} (\cos \beta x_i + \sin \beta x_i) \tag{9.15.3}$$

② In the cases where loads act on beams ends or junctions

$$M = \sum \frac{W_i}{\beta} e^{-\beta x_i} \sin \beta x_i \tag{9.15.4}$$

$$S = \sum W_i e^{-\beta x_i} (\sin \beta x_i - \cos \beta x_i) \tag{9.15.5}$$

$$y = \sum \frac{2 W_i \beta}{K} e^{-\beta x_i} \cos \beta x_i \tag{9.15.6}$$

where

M : flexural moment at subject section (N - mm)
S : shear force at subject section (N)
y : amount of deflection at subject section (mm)

$$\beta = \sqrt[4]{\frac{K}{4 E_c I_c}}$$

E_c : modulus of elasticity of concrete (N/mm^2)
W_i : wheel load (N)
l_c : inertia moment of concrete foundation (mm^4)
K : modulus of elasticity of ground $K = C_b$
C : pressure needed to settle a unit area of ground by unit depth (N/mm^3)
b : bottom width of concrete beam (mm)
x_i : distance from wheel load point to subject section (mm)

(3) The reinforced concrete beams placed on rubble foundations are assumed to be supported by continuous elastic foundations of a uniform section over the entire length. In other words, it is assumed that the reaction forces of loaded beams are continuously distributed and their strengths are directly proportional to the amount of deflection at each point. Assuming the moment generated at a point of a distance X from the traveling wheel as M and the deflection as y, M and y are expressed by equations **(9.15.7)** and **(9.15.8)**, respectively, by an elastic theory.[39), 49)]

$$M_k = W \sqrt[4]{\frac{E_c I_c}{64K}} e^{-\beta x} (\cos \beta x - \sin \beta x) = W \sqrt[4]{\frac{E_c I_c}{64K}} \phi_1 \tag{9.15.7}$$

$$y = \frac{W}{\sqrt[4]{64 E_c I_c K^3}} e^{-\beta x} (\cos \beta x + \sin \beta x) = \frac{W}{\sqrt[4]{64 E_c I_c K^3}} \phi_2 \tag{9.15.8}$$

When two or more wheels are close to each other, the flexural moment directly under an arbitrary wheel is obtained from equation **(9.15.9)**.

$$M_{1k} = W_1 \sqrt[4]{\frac{EI}{64K}} \tag{9.15.9}$$

Expressing the distance between another wheel as x_2 and ϕ_1 for βx_2 as ϕ_{12}, the flexural moment is calculated from equation **(9.15.10)**.

$$M_{2k} = W_2 \sqrt[4]{\frac{EI}{64K}} \phi_{12} \tag{9.15.10}$$

The resultant moment directly under the first wheel can be determined from $M = M_1 + M_2$. Equation **(9.15.1)** can be derived from this expression. Deflection can be obtained in the same way. The values given by the following expression may be used for the values of C.[39), 41)]

$C = 5.0 \times 10^{-2} \sim 0.15$ (N/mm^2)

References

1) Inagaki, M., K. Yamaguchi and T. Katayama: Standard design of mooring post (Draft),, Technical Note of PHRI No.102, 1970
2) UEDA, S. and E. OOI: On the Design of Fending Systems for Mooring Facilities in a Port, Technical Note of PHRI No596,1987
3) Ueda, S., T. Umemura, S. Shiraishi, S. Yamamoto, Y. Akakura and H. Yamase
4) Ueda, S., Hirano, T., Shiraishi, S., Yamamoto, S. and Yamase, S.: Reliability Design Method of Fender for Berthing Ship, Proc. Int'l Navig. Congr. (PIANC), Sydney, pp.692-707, 2002
5) Nagao, T., T. Okada, N. Iwata, H. Matsumoto, M. Ishida and Y. Sato: A study on the performance-based design of quay walls under berthing condition, Technical Note of National Institute for Land and Infrastructure Management No.63, 2003
6) YONEYAMA, H., Hironao TAKAHASHI and Ayako GOTO: Proposition of Partial Factors on Reliability-Based Design Method for Fenders, Technical Note of PARI No.1115,2006
7) Kitajima, S., Hiroshi SAKAMOTO, Shohei KISHI, Takuji NAKANO and Syusaku KAKIZAKI: On Some Problems Being Concerned with Preparation for the Design Standards on `Port and Harbour Structures, Technical Note of PHRI No,30, 1967
8) Coastal Development Institute of Technology : Guideline for design of SPS (Single pile structure), 1992
9) Kiuchi, S., M. Matsushita, M. Takahashi, M. Kakee, S. Isozaki and M. Suzuki
10) KIKUCHI, Y., K. TAKAHASHI and M. SUZUKI: Lateral Resistance of Single Piles under Large Repeated Loads, Rept. of PHRI Vol. 31 No.4, PP. 33-60, 1992
11) PIANC: Report of PIANC Working Group No.33 "Guidelines for the Design of Fenders", Supplement to Bulletin, 2000
12) Permanent International Association of Navigation Congress: Guideline of Fender system 2002Version, Sea Port Committee, 33rd Report of Working Group, p,133, 2005
13) Kawakami, M., H. Shinkawa, K. Tanaka and J. Kurasawa: Relation between structural strength of hull and fender, Report of School of Engineering, Hiroshima Univ., Vol. 24, Part I, p,133, 2005
14) Tukayama, A.: Strength of ships for docking, Journal of Nippon Kaiji Kyokai,No.151,1975
15) Nagasawa, J.: Berthing force and strength of outer plate of ship, Ships, Vol.40 No,3, pp.46-50, 1967
16) PIANC: Report of the International Commission for Improving the Design of Fender Systems, Supplement to Bulletin, No.45, 1984
17) Vasco Costa: The berthing ship, The Dock & Harbour Authority, Vol.XLV, May-July, 1964
18) Japan Port Association, Examples of design calculation of port structures (Vol. 1), pp.112-153, pp.257-300, 1992
19) UEDA, S. and S. SHIRAISHI: On the Design of Fenders Based on the Ship Oscillations Moored to Quay Walls, Technical Note of PHRI No.729, 1992
20) Japan Road Association: Standard and Commentary of Highway Lighting Facilities, Maruzen Publishing, 1996
21) Japan Lighting Committee: Guide for lighting of outdoor work place, JICA Translation Publications No. 9, Maruzen Publishing, 1989
22) The illumination Engineering Institute of Japan: Maintenance rate for lighting design and maintenance planning, Technical Guideline of The illumination Engineering Institute of Japan,, JIEG-001, Maruzen, 1987
23) Coastal Development Institute of Technology: Design Manual of Buffer Stop, 1994
24) Japan Road Association: Commentary of enforcement regulations for road structures and application, Maruzen Publishing, execution, pp.309-316,2004
25) Japan Road Association: Road earth works- Guideline of drainage works, pp.9-75,1994
26) SATO, K., H. MORIGUCHI, T. ASAJIMA and H. SHIBUYA: Control of shrinkage Cracking of Concrete Pavements on Pier Slabs, Rept. of PHRI Vol. 14, No. 2, pp. 111-138, 1975
27) Ozawa, K. and S. Kitazawa: Setup method of deciding number of loads by cargo handling machine, in designing of pavement wharf apron, Technical Note of National Institute for Land and Infrastructure Management No.285, 2006
28) Japan Road Association: Design and Construction Guideline for Pavement, Maruzen Publishing, 2002
29) JSCE: Standard Specifications for concrete,（Pavement), 2002
30) NAGAO,T., Hiroshi YOKOTA,Koichiro TAKECHI,Susumu KAWASAKI and Noboru OKUBO: Fatigue Limit State Design Method for Superstructures of Open Type Wharves in view of Cargo Handling Machine Loads, Rept. of PHRI Vol.37 No.2, pp.177-220, 1998
31) Japan Association of Cargo-handling Machinery System: Survey report on standardization of related facilities, (6ht Report), 1998
32) Japan Association of Cargo-handling Machinery System: Survey report on standardization of related facilities, (5th Report), 1997
33) Japan Association of Cargo-handling Machinery System: Report of Survey and Study Committee of Container cargo-handling facilities, 1993
34) Architectural Institute of Japan: Design standards for steel structure, p.4, 1994
35) Yokoyama, Y.: Design and construction of steel piles, Sankai-do Publishing, pp.99-11l, 1963
36) Japan Society of Mechanical Engineers: Mechanical Engineering Lectures Cargo handling equipment, p.239,1959
37) Minemura, Y.: Lecture note for rail connection and maintenance course, Japan Railway Maintenance Association, p,4,1958
38) KITAJIMA, S. and O. HORII: The Influence of Mobile cranes on Quaywalls, Technical Note of PHRI No.29, pp4-62, 1967

39) Kuniyuki, I.: Handbook of Cargo-handling Mechanical Engineering, Corona Publishing, ,p526,1961
40) Kitabatake, T., K. Katayama:Timoshenko's Material Mechanics of material (Vol. 2), Corona Publishing, p.9,1955
41) Yasojima, Y: Railway track, Giho-do Publishing, p.302,1967
42) KATAYAMA, T. Muneaki SEGAWA, Ken-ichi FURUHATA and Yumiko MOMOSE: A Collection of Detail Design of Connected and Corner Part of Quay Wall, Technical Note of PHRI No.114, 1971